Study Unit

Motorcycle Maintenance

By

Ed Abdo

About the Author

Edward Abdo has been actively involved in the motorcycle and ATV industry for more than 25 years. He received factory training from Honda, Kawasaki, Suzuki, and Yamaha training schools. He has worked as a motorcycle technician, service manager, and Service/Parts department director.

After being a chief instructor for several years, Ed is now the Curriculum Development Manager for the Motorcycle Mechanics Institute in Phoenix, Arizona. He is also a contract instructor and administrator for American Honda's Motorcycle Service Education Department.

Preview

In this study unit, you'll learn the importance of scheduled motorcycle and ATV maintenance. Included in this study unit is an explanation of motorcycle emission-control systems, how they function, and how they should be maintained. There are also sections covering scheduled maintenance intervals, engine maintenance procedures, and chassis maintenance procedures.

When you complete this study unit, you'll be able to

- Identify the different emission-control systems used on street-legal motorcycles
- Understand how to perform emission-control system maintenance procedures
- Explain how to perform various engine and chassis maintenance procedures
- Describe the correct procedures for storing a motorcycle or ATV

Contents

Motorcycle Maintenance

INTRODUCTION

What are the benefits to having motorcycles and ATVs tuned-up and serviced on a regular basis? Motorcycle and ATV technicians are frequently asked this question. Peak performance from a motorcycle or ATV requires that each part be in good working condition and correctly adjusted. An experienced technician knows that if a part isn't functioning correctly, it can affect the performance of other related parts, and the performance of the entire machine. For example, a spark plug that doesn't fire when it should affects the power output of the engine. Spark plug failures can be caused by an electrical system malfunction or by carburetion system problems. Tune-ups and scheduled service ensure that marginal parts and out-of-tolerance adjustments are routinely corrected.

Tune-Up vs. Service

All vehicles require some level of routine maintenance. This maintenance is divided into two categories—tune-ups and service. A *tune-up* generally consists of inspecting, testing, and adjusting the motorcycle or ATV engine. During a tune-up, parts such as spark plugs, ignition points (where used), condensers, and filters are replaced. Tune-ups are needed to keep engines operating at peak efficiency. Normally, a tune-up can be done without removing the engine from the motorcycle or ATV frame. Any maintenance procedures outside of the limits of a tune-up are usually considered to be *service.* Complete service may include inspecting, repairing, and adjusting various parts and systems such as the clutch, cables, chains, tires, brakes, steering, and exhaust.

As you'll find, the word *tune-up* means different things to different people. For instance, some motorcycle or ATV owners assume that certain items will be serviced during a routine tune-up, when in fact, the tune-up may not include that level of service. A fairly common customer misconception is that a tune-up automatically includes carburetor overhaul service. Some shops may include this in a tune-up, others won't. Another example of tune-up variations is that some service shops will adjust the valves in a four-stroke engine during a tune-up while other service shops won't. Some shops consider this level of maintenance to be service. The differences in what different shops provide during a tune-up is one of the main reasons that you'll find a wide range of prices for tune-ups.

Maintenance Starts with a Clean Vehicle

The first step in performing quality maintenance on any motorcycle or ATV is to start with a clean vehicle. It's very important that dirt or other foreign material not contaminate the internal working parts of the engine. Use soap and water or a commercially available degreaser to clean the exterior. (It isn't advisable to use steam for cleaning because it can damage the parts of the electrical system). Clean motorcycles and ATVs are also easier to work on and look better when you have finished the maintenance work. If you're operating your own repair shop, the cost of vehicle cleaning can be added to the price you charge for the service work. If you make your clean-vehicle policy known to your customers, you can encourage them to bring in clean vehicles when they're having service work done.

MAINTENANCE INTERVALS

Manufacturers recommend that motorcycles and ATVs be serviced at specific mileage or time intervals. The suggested maintenance intervals are listed in the owner's manual to help owners and technicians set up a realistic and appropriate maintenance schedule. Interestingly enough, many motorcycle and ATV owners have a vehicle tune-up every spring, even though it may not be necessary. For example, if a motorcycle owner had a tune-up done last spring at 5000 miles and rode only 1500 miles over the summer, the motorcycle won't need a tune-up this spring.

To ensure maximum performance, a technician should check parts for wear and perform needed adjustments during regular service interval inspections. This allows technicians to alert owners if major repair work is required. Owners can then schedule when such repairs should be done. This process can eliminate many serious mechanical failures, benefiting both the owner and the technician. In a service environment, it will be important for you to convey to vehicle owners the results and findings of a routine service inspection in a way that generates confidence in your ability. If, for example, during the inspection, you find a defective part, you should be able to provide the owner with an accurate assessment of the problem and an estimate of what it will cost to correct.

The following charts are examples of typical engine and chassis maintenance intervals as they would appear in a service or owner's manual. You should note that the maintenance schedules you'll see in many manuals are based upon average riding conditions. Machines that are subjected to severe usage would require more frequent servicing than what is listed in the charts found in the service or owner's manual.

Periodic Maintenance Chart # 1

Four-Stroke ATV

Item	Interval		
	Initial 1 month	Every 3 months	Every 6 months
Cylinder Head & Exhaust Pipe Nuts	Tighten	Tighten	- - -
Valve Clearance	Inspect, Adjust, Clean	Inspect, Adjust, Clean	- - -
Spark Plug (Replace every 12 months)	- - -	Inspect, Adjust, Clean	- - -
Air Cleaner	- - -	Clean	- - -
Engine Oil and Oil Filter	Replace	Replace	- - -
Clutch	Inspect, Adjust, Clean	- - -	Inspect, Adjust, Clean
Carburetor	Inspect, Adjust, Clean	- - -	Inspect, Adjust, Clean
Fuel Line (Replace every 4 years)	Inspect, Adjust, Clean	- - -	- - -
Spark Arrester	- - -	- - -	Clean
Drive Chain	Inspect, Adjust, Clean	Inspect, Adjust, Clean	- - -
Sprockets	Inspect, Adjust, Clean	Inspect, Adjust, Clean	- - -
Brakes	Inspect, Adjust, Clean	Inspect, Adjust, Clean	- - -
Brake Fluid (Replace every 2 years)	Inspect, Adjust, Clean	Inspect, Adjust, Clean	- - -
Brake Hose (Replace every 4 years)	- - -	Inspect, Adjust, Clean	- - -
Tires	Always inspect before riding	Always inspect before riding	Always inspect before riding
Steering	Inspect, Adjust, Clean	Inspect, Adjust, Clean	- - -
Chassis Nuts & Bolts	Tighten	Tighten	- - -
General Lubrication	- - -	Lubricate	- - -

Periodic Maintenance Chart # 2

Two-Stroke Motocross (Competition) Motorcycle

Item	Note	Interval		
		Each race or approx. 2.5 hr.	Every 4 races or approx. 7.5 hr.	Every 9 races or approx. 22.5 hr.
Throttle Operation	Note 4	Inspect, Adjust, Clean	- - -	- - -
Air Filter	Note 1	Clean	- - -	- - -
Spark Plug	Note 4	Inspect, Adjust, Clean	Replace	- - -
Radiator Coolant	Note 2	Inspect, Adjust, Clean	- - -	- - -
Cooling System	Note 4	Inspect, Adjust, Clean	- - -	- - -

(Continued)

Periodic Maintenance Chart # 2

Two-Stroke Motocross (Competition) Motorcycle

Item	Note	Interval		
		Each race or approx. 2.5 hr.	Every 4 races or approx. 7.5 hr.	Every 9 races or approx. 22.5 hr.
Cylinder Head Decarbonizing	Note 4	- - -	Clean	- - -
Exhaust Valve and Exhaust Linkage Decarbonizing	Note 4	- - -	Clean	- - -
Piston and Piston Rings	Note 4	- - -	Replace	- - -
Piston Pin and Connecting Rod Small End Bearing	Note 4	- - -	- - -	Replace
Transmission Oil	Note 4	- - -	Replace	- - -
Drive Chain	Note 4	Inspect, Adjust, Clean, Lubricate	Replace	- - -
Drive Chain Sliders	Note 4	Inspect, Adjust, Clean	- - -	- - -
Drive Chain Rollers	Note 4	Inspect, Adjust, Clean	- - -	- - -
Drive Sprocket	Note 4	Inspect, Adjust, Clean	- - -	- - -
Driven Sprocket	Note 4	Inspect, Adjust, Clean	- - -	- - -
Brake Fluid	Note 2	Inspect, Adjust, Clean	- - -	- - -
Brake Pads	Note 4	Inspect, Adjust, Clean	- - -	- - -
Brake System	Note 4	Inspect, Adjust, Clean	- - -	- - -
Clutch System	Note 4	Inspect, Adjust, Clean	- - -	- - -
Control Cables	Note 4	Inspect, Adjust, Clean	- - -	- - -
Expansion Chamber/Silencer	Note 4	Inspect, Adjust, Clean	- - -	- - -
Suspension	Note 4	Inspect, Adjust, Clean	- - -	- - -
Swing Arm/Shock Linkage	Note 4	- - -	Lubricate	- - -
Fork Oil	Note 3	- - -	Replace	- - -
Nuts, Bolts, Fasteners	Note 4	Inspect, Adjust, Clean	- - -	- - -
Wheels/Tires	Note 4	Inspect, Adjust, Clean	- - -	- - -
Steering-Head Bearings	Note 4	- - -	- - -	Inspect, Adjust, Clean

Note 1: Clean after every motocross (dusty conditions)

Note 2: Replace every two years—replacement requires mechanical skill

Note 3: Replace after the first break-in ride

Note 4: Troubleshoot as needed

Periodic Maintenance Chart # 3						
Four-Stroke Multicylinder Street Motorcycle						
Item	**Interval (miles)**					
	600	**4,000**	**8,000**	**12,000**	**16,000**	**20,000**
Fuel Line	- - -	IAC	- - -	IAC	- - -	IAC
Throttle Operation	- - -	IAC	- - -	IAC	- - -	IAC
Carburetor Choke	- - -	IAC	- - -	IAC	- - -	IAC
Air Cleaner	- - -	- - -	Replace	- - -	- - -	Replace
Spark Plug	IAC	Replace	IAC	Replace	IAC	Replace
Valve Clearance	- - -	- - -	- - -	IAC	- - -	- - -
Engine Oil	- - -	Replace	- - -	Replace	- - -	Replace
Engine Oil Filter	- - -	Replace	- - -	Replace	- - -	Replace
Carburetor Synchronization	- - -	IAC	- - -	IAC	- - -	IAC
Carburetor Idle Speed	IAC	IAC	IAC	IAC	IAC	IAC
Radiator Coolant	- - -	IAC	- - -	IAC	- - -	Replace
Cooling System	- - -	IAC	- - -	IAC	- - -	IAC
Secondary Air Supply System	- - -	IAC	- - -	IAC	- - -	IAC
Evaporative Emission-Control System	- - -	- - -	IAC	- - -	- - -	IAC
Brake Shoe/Pad Wear	IAC	IAC	IAC	IAC	IAC	IAC
Brake System	- - -	IAC	- - -	IAC	- - -	IAC
Brake Light Switch	- - -	IAC	- - -	IAC	- - -	IAC
Headlight Aim	- - -	IAC	- - -	IAC	- - -	IAC
Clutch System	IAC	IAC	IAC	IAC	IAC	IAC
Side Strand	- - -	IAC	- - -	IAC	- - -	IAC
Suspension	- - -	IAC	- - -	IAC	- - -	IAC
Nuts, Bolts, Fasten-ers	- - -	IAC	- - -	IAC	- - -	IAC
Wheels/Tires	- - -	IAC	- - -	IAC	- - -	IAC
Steering-Head Bearings	- - -	IAC	- - -	IAC	- - -	IAC
Note: IAC equals Inspect, Adjust, and Clean						

As you can see by these suggested maintenance intervals, different adjustments are recommended at different times. Always keep in mind that if a motorcycle or ATV is being used under harsh conditions, such as extreme heat or dusty conditions, you'll need to perform certain maintenance procedures more frequently.

Road Test 1

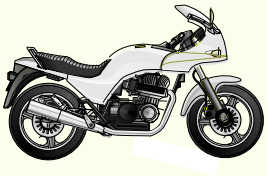

At the end of each section of *Motorcycle Maintenance*, you'll be asked to check your understanding of what you've just read by completing a "Road Test." Writing the answers to these questions will help you review what you've learned so far. Please complete *Road Test 1* now.

1. *True or False?* All four-stroke motorcycles and ATVs must have at least one yearly tune-up that includes adjusting the valves.

2. Based on the service interval charts, service intervals for street-legal motorcycles are given in miles, and service intervals for off-road motorcycles and ATVs are given in _____.

3. *True or False?* Based on the service interval chart for a four-stroke street motorcycle, the oil and oil filter should be replaced at different intervals.

4. When should the transmission oil in a two-stroke motocross motorcycle be changed?

   _____

5. How frequently should the spark plug be changed in a four-stroke multicylinder street motorcycle?

   _____

Check your answers with those on page 51.

MOTORCYCLE AND ATV ENGINE MAINTENANCE

As a motorcycle and ATV technician, you'll need to perform engine tune-ups and vehicle maintenance including cleaning, adjusting, and replacing parts. This will ensure that parts meet the manufacturer's specifications. The parts and systems listed below are subject to dirt, wear, and/or vibration, and should be carefully inspected (and replaced or adjusted as necessary) when you're doing an engine tune-up and vehicle maintenance. In addition, certain tests may need to be performed, such as a compression and leakdown test.

- Oil and oil filter
- Cooling system and coolant
- Valve adjustment (four-stroke engines)
- Power valve (two-stroke engines)
- Clutch
- Spark plug
- Battery

- Ignition system
- Carburetor
- Air filter

Oil and Oil Filter Inspection and Replacement

In an earlier study unit, we introduced you to maintaining both two-stroke and four-stroke engine lubrication systems. We'll now review some of what you've learned as well as cover some new material.

Two-Stroke Engine

The only maintenance required with the two-stroke engine lubrication system is to be certain that there's a correct ratio of oil to fuel in the premix type of lubrication system. For an oil-injection lubrication system, you must verify that there's an adequate supply of two-stroke oil in the oil reservoir.

The two-stroke transmission and clutch have a separate oil drain plug that's normally found on the bottom of the tranmission (Figure 1). An oil-level check bolt is used to verify the proper oil level in many two-stroke transmissions. It's necessary to drain and replace this oil on a regular basis as described in the appropriate owner's or service manual. Neglecting to service the transmission can result in premature transmission and bearing failures.

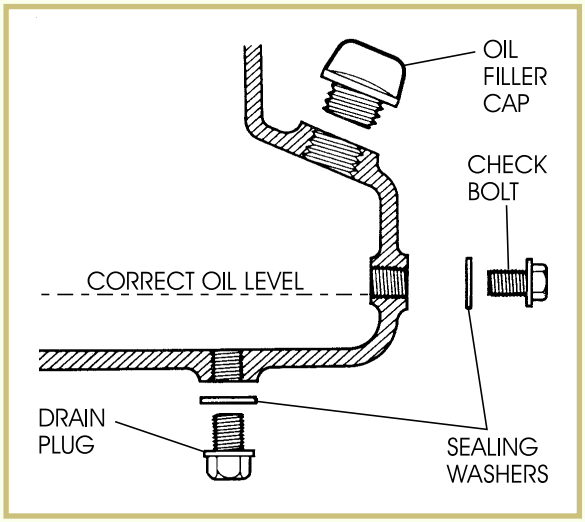

FIGURE 1—A Two-Stroke Transmission Oil Drain Plug and Check Bolt (Copyright by American Honda Motor Co., Inc. and reprinted with permission)

Four-Stroke Engine

Most four-stroke motorcycle and ATV engines use the same oil to lubricate the engine, transmission, and clutch components. These engines usually have only one drain plug for removing the oil from the engine crankcase. In most cases, there's also an oil filter that should be replaced whenever the engine oil is changed. Changing the oil filter is just as important as changing the engine oil. The filter traps and contains most of the dirt and contaminants that the engine has released into the engine oil.

Changing the Oil Filter

The most common types of motorcycle oil filters are the cartridge-type paper filter and the element-type paper filter. The cartridge-type filter is removed and installed by using an oil filter wrench. The wrench is designed to grasp the outside of this type of filter as shown in Figure 2. The element-type filter is removed by first removing the filter cover (Figure 3) and then removing the oil filter from the filter cover correctly. Reference the service manuel for the model you are working on for the proper assembly procedure. It's critically important that you correctly install the new oil filter, springs, washers, and seals (Figure 4). If installed incorrectly, this type of oil filter won't provide proper engine-oil filtering. In a worst-case scenario, the filter could prevent the oil from reaching the engine components, which would cause major engine damage.

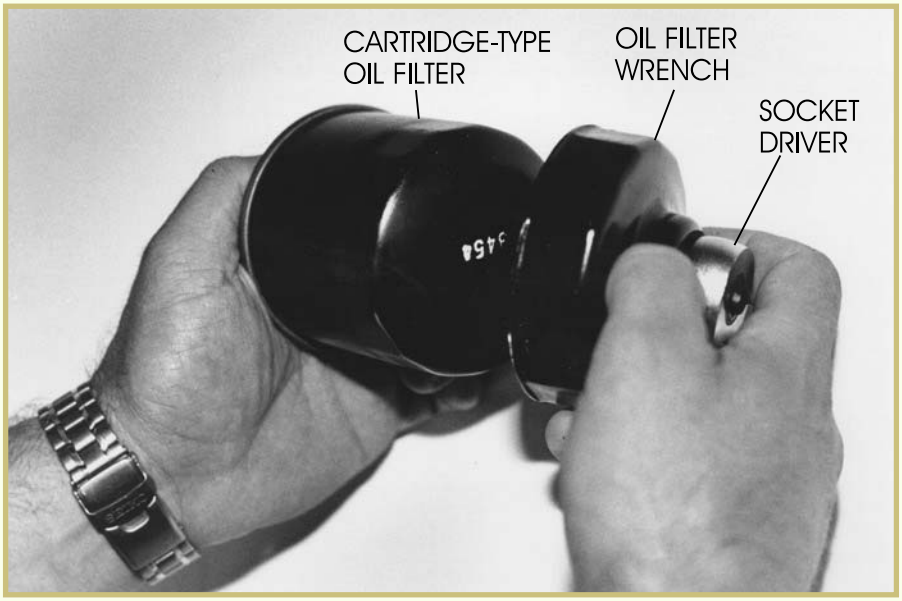

FIGURE 2—This oil filter wrench is designed to grasp a cartridge-type oil filter.

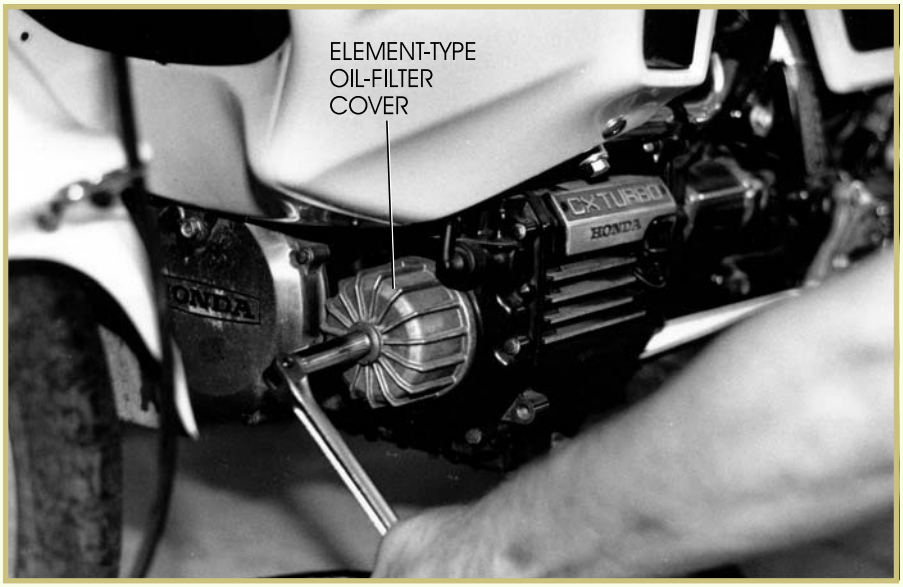

FIGURE 3—The element-type oil filter is changed by first removing the filter cover.

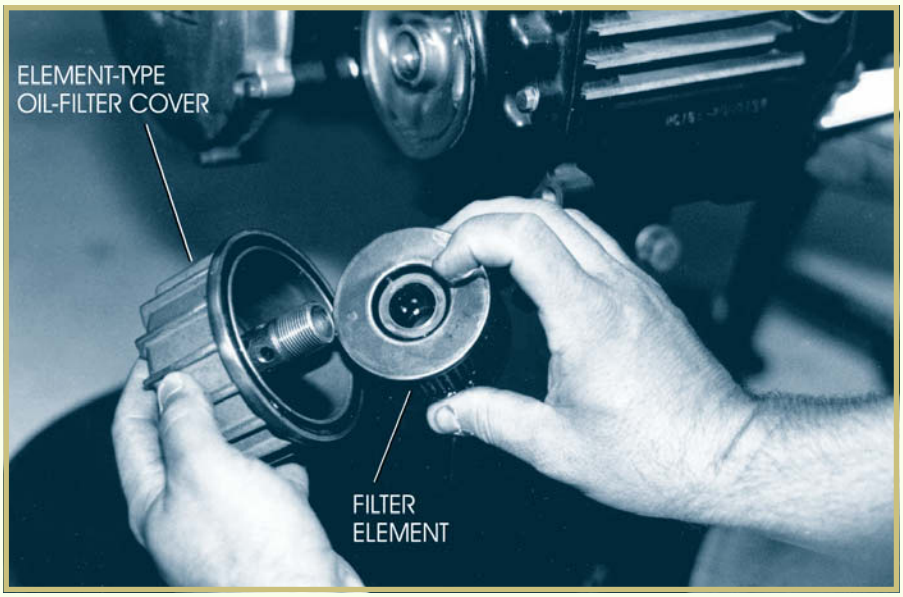

FIGURE 4—This photo shows an element-type oil-filter assembly after removal from the engine.

Checking the Oil Level

When you're checking the oil level of a motorcycle engine, be sure the motorcycle is in an upright position, on level ground, and not parked on the side stand. If the engine oil is checked while the motorcycle is on the side stand, the oil may appear to be low because of the angle of the motorcycle. When you're checking the oil level of an ATV engine, ensure that the vehicle is parked on level ground.

Always use the manufacturer's recommended oil in any type of motorcycle or ATV engine, and remember to properly tighten all fasteners when doing any engine maintenance work such as engine oil and oil filter replacement.

Cooling System Inspection and Replacement

Liquid-cooled systems can be pressure-tested for leaks with a cooling system pressure tester (Figure 5) to ensure that the system holds a test pressure for a specified length of time. Each manufacturer provides specifications for cooling system pressure capabilities. If the system fails the pressure test, you should check hoses, pipe connections, the radiator, and the water pump for leaks. The water pump has a mechanical seal to separate the engine oil and the coolant. This seal is the most common cause of failures in a liquid-cooled system. Most water pumps have a *telltale hole* on the bottom of the pump (Figure 6). Coolant will leak out of this hole when the mechanical seal has failed, which will require you to replace the pump. When checking the cooling system, the coolant should be checked with a hydrometer to verify that it has the correct 50 percent mixture of coolant and distilled water (Figure 7).

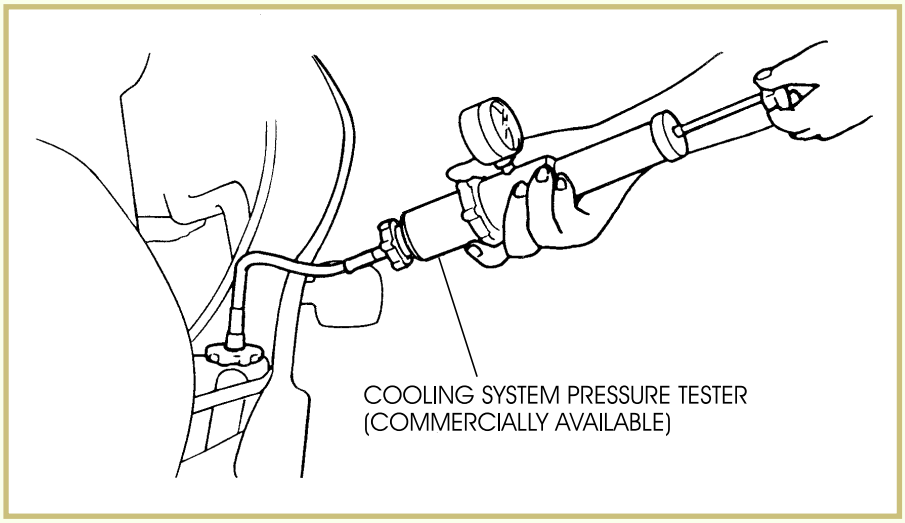

FIGURE 5—A Typical Cooling System Tester in Use (Copyright by American Honda Motor Co., Inc. and reprinted with permission)

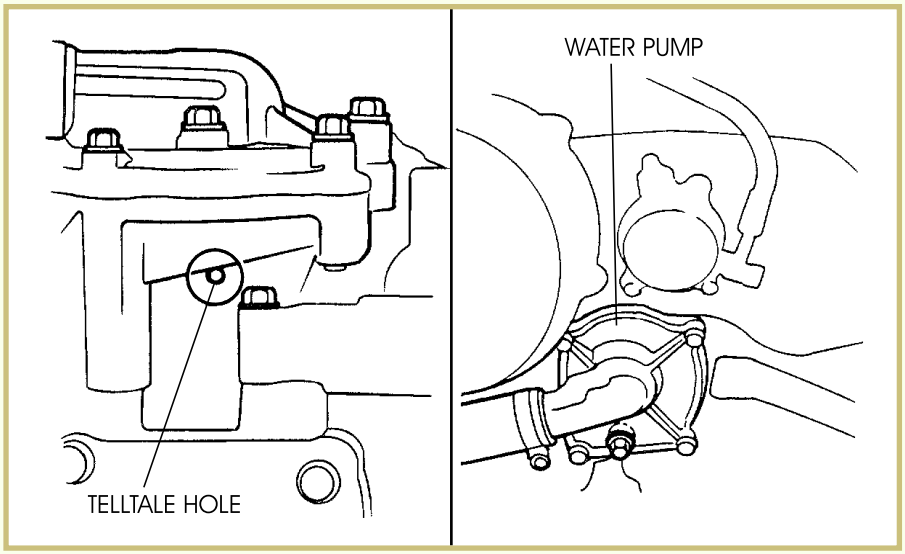

FIGURE 6—Location of a Water Pump Telltale Hole (Copyright by American Honda Motor Co., Inc. and reprinted with permission)

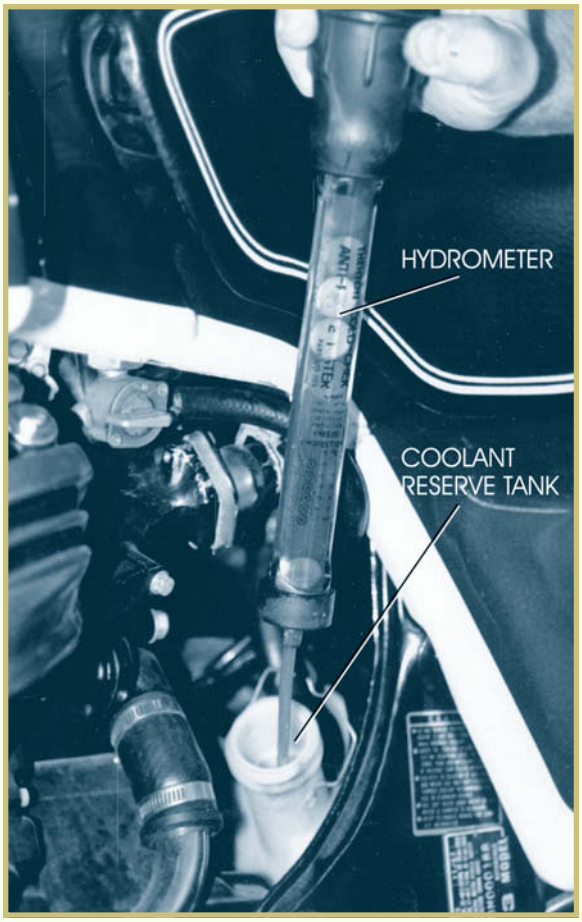

FIGURE 7—Checking the Coolant Mixture with a Hydrometer

Air-cooled engines must have clean cooling fins (Figure 8). The forced-air cooling systems used on many motorscooters and on some ATVs (Figure 9) should be inspected after vehicle storage. Field mice and other small rodents have been known to build their winter homes inside these types of engine housings.

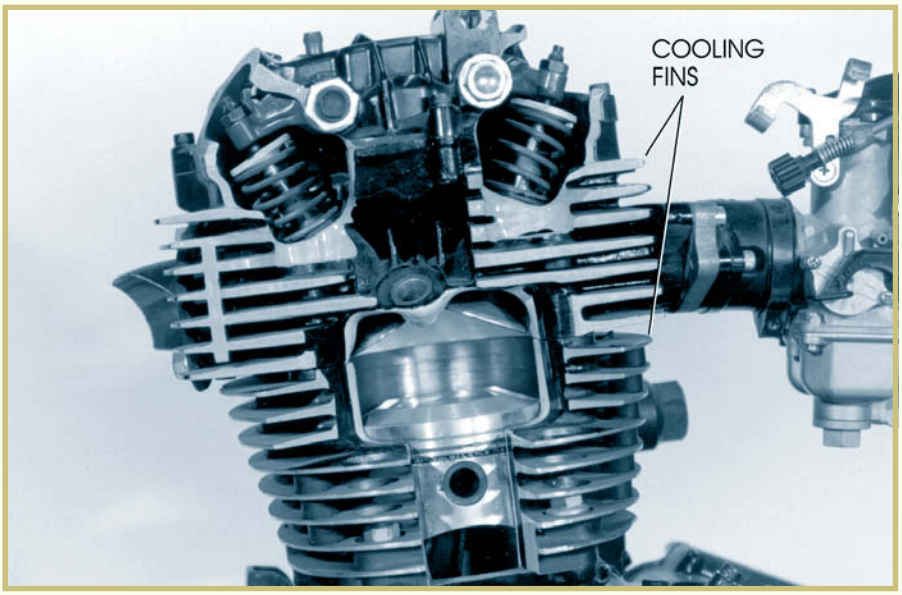

FIGURE 8—The cooling fins of an air-cooled engine must be kept clean for proper cooling.

FIGURE 9—The forced-air cooling path must be kept clean and unblocked.
(Copyright by American Honda Motor Co., Inc. and reprinted with permission)

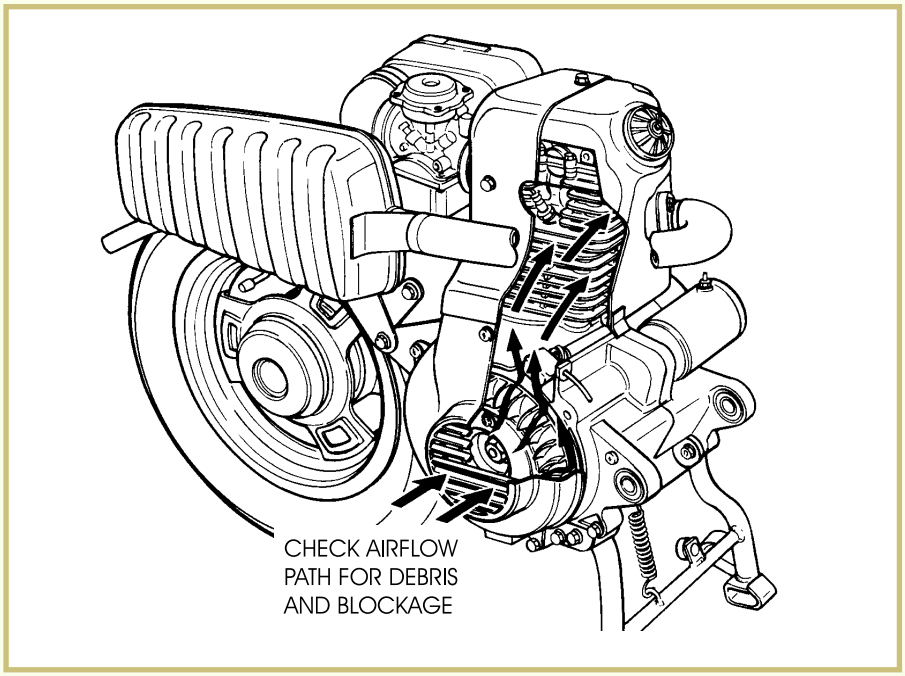

Compression and Leakdown Tests

Compression tests and leakdown tests provide a good indication of the general condition of an engine's piston, rings, and cylinder area. Compression tests are done on both two-stroke and four-stroke engines.

Compression Test

To do a *compression test,* remove the spark plug(s). Then, using the compression gauge (Figure 10), measure the compression of each cylinder while the engine is being rotated rapidly by the electric starter—or the kick or pull starter mechanism. This test ensures that the engine compression is high enough to heat the fuel-and-air mixture to a combustible level. The compression reading will normally exceed 125 psi. If the compression is below 125 psi, it indicates possible worn parts, and more than an engine tune-up might be needed.

Unfortunately, the results of a compression test can be deceiving. For example, if the engine isn't in stock condition, if the battery doesn't turn the engine fast enough, or if the testing procedures aren't correctly followed, the compression test may indicate that the engine should be disassembled and rebuilt, when the engine is actually in good working condition. Always remember to hold the throttle control in the wide-open position when checking engine compression, to allow the maximum amount of air to be drawn into the engine. If the throttle isn't held open, the compression reading will almost always read too low.

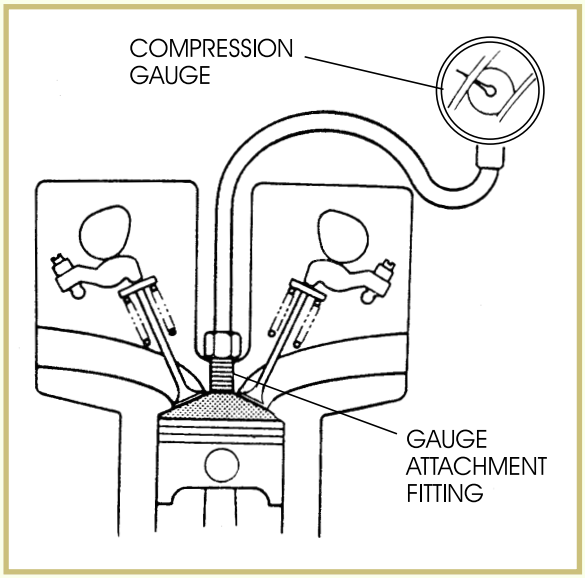

FIGURE 10—Measuring the Compression with a Compression Gauge (Copyright by American Honda Motor Co., Inc. and reprinted with permission)

When the compression test has been performed correctly, there are other items you'll need to consider. If the compression readings are all below the service limit, but the readings for all cylinders are relatively close and the engine isn't smoking and is running okay, the compression test by itself is seldom a good reason to disassemble the engine and do an expensive engine rebuild. If the compression readings for the cylinders of a multicylinder engine vary more than 15 percent, there's a good possibility that the engine has a problem that will need extensive repair work.

Leakdown Test

Leakdown tests are performed on four-stroke motorcycle and ATV engines. A *leakdown tester* consists of a calibrated pressure gauge that's connected to a pressure regulator, a pressure source, and a flow restrictor (Figure 11). As a general rule, a leakdown test provides a better indication of any internal engine problems than a compression test. The test is done by pressurizing the cylinder when the piston is at top-dead-center (TDC) on the compression stroke, and measuring the rate at which the air escapes past the rings, piston, and valves. A range of acceptable air loss percentages is given by each tester manufacturer. A leakdown tester indicates when an engine probably needs repair. It also tells you where the problem is located. By listening for escaping air at the air box, the exhaust system, and engine crankcase filler-cap, you can determine if the problem is being caused by the intake valves, exhaust valves, or the piston and rings. Leakdown testers are available at most quality automotive tool suppliers.

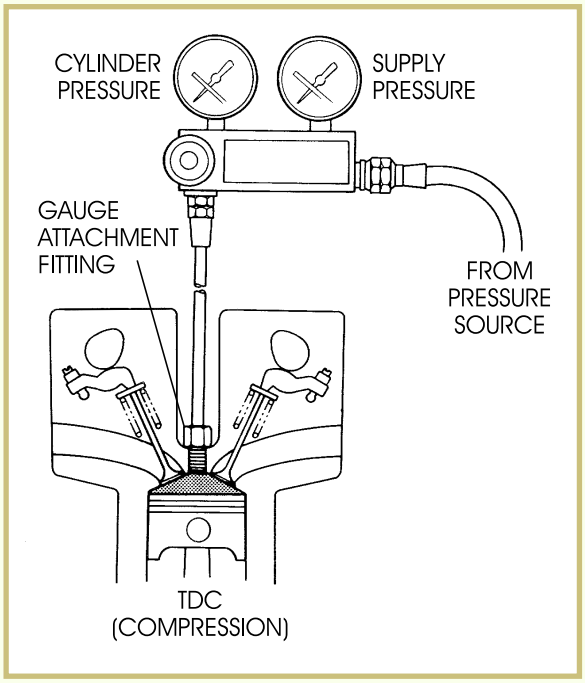

FIGURE 11—A Leakdown Tester Attached to a Cylinder (Copyright by American Honda Motor Co., Inc. and reprinted with permission)

Valve Adjustment (Four-Stroke Engines)

If the motorcycle or ATV has a four-stroke engine, the valves should be inspected for proper adjustment. Valve clearance (lash), as shown in Figure 12, is necessary to allow for heat expansion, oil flow clearance, and proper valve sealing. When valves aren't properly adjusted, engine performance may be affected. Valves should be adjusted when the engine is at room temperature. Many motorcycle and ATV technicians prefer to have the four-stroke motorcycle or ATV stored in the shop overnight to ensure that the engine hasn't been run. The technician can then be sure that the metal parts haven't expanded, ensuring a more accurate valve adjustment procedure.

FIGURE 12—Measuring for Proper Valve Clearance (Also Known as Valve Lash) on a Four-Stroke Engine

Valve Adjustment Methods

There are different ways to adjust the valves on a four-stroke motorcycle or ATV engine. Here are the most popular types. Note, for every valve type the piston associated with each valve must be at Top Dead Center (TDC) in order to check and adjust the valve properly.

- The *screw-and-locknut* (Figure 13) valve arrangement uses a screw that can be turned in or out to change the clearances. A locknut is used to hold the screw in place. The screw and locknut may be located on the rocker arm or on a push rod.
- The shim-and-bucket valve arrangement is used both for valve opening and as a valve adjustment device. The shims are used to adjust the valves for proper clearances. Clearances are changed by altering the size of the shim. The two popular types of shim-and-bucket adjusters (Figure 14) are *shim-over-bucket,* where the shim rests on top of the bucket, and *shim-under-bucket,* where the shim rests under the bucket. With the shim-under-bucket design, you must remove the camshaft to replace a shim.
- *Hydraulic-valve lash adjusters (tappets)* (Figure 15) automatically adjust for the proper valve clearances by using oil pressure to maintain zero lash at all engine temperatures and rpms. This hydraulic design requires little or no maintenance.

After you've adjusted the valves, always recheck the compression and compare this reading with the reading obtained before the valves were adjusted. If a valve was too tight before adjustment, the compression will almost always increase. If you adjusted a valve too tightly, the compression will probably decrease. If this indication occurs, you'll have to readjust the valves.

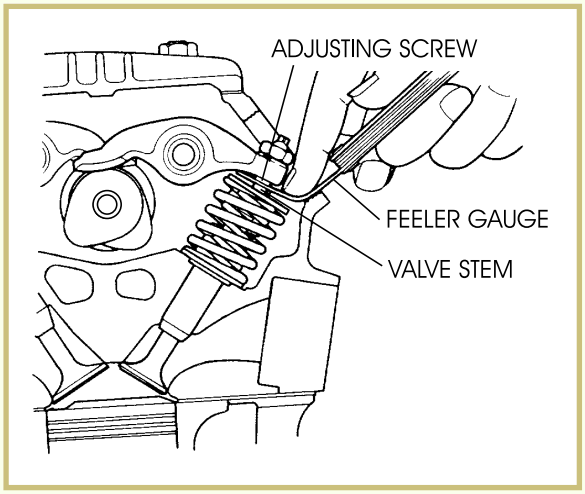

FIGURE 13—A Screw-and-Locknut Valve Adjuster (Copyright by American Honda Motor Co., Inc. and reprinted with permission)

FIGURE 14—This illustration shows the location of the shims in the shim-over-bucket design and the shim-under-bucket design valve adjustments. (Copyright by American Honda Motor Co., Inc. and reprinted with permission)

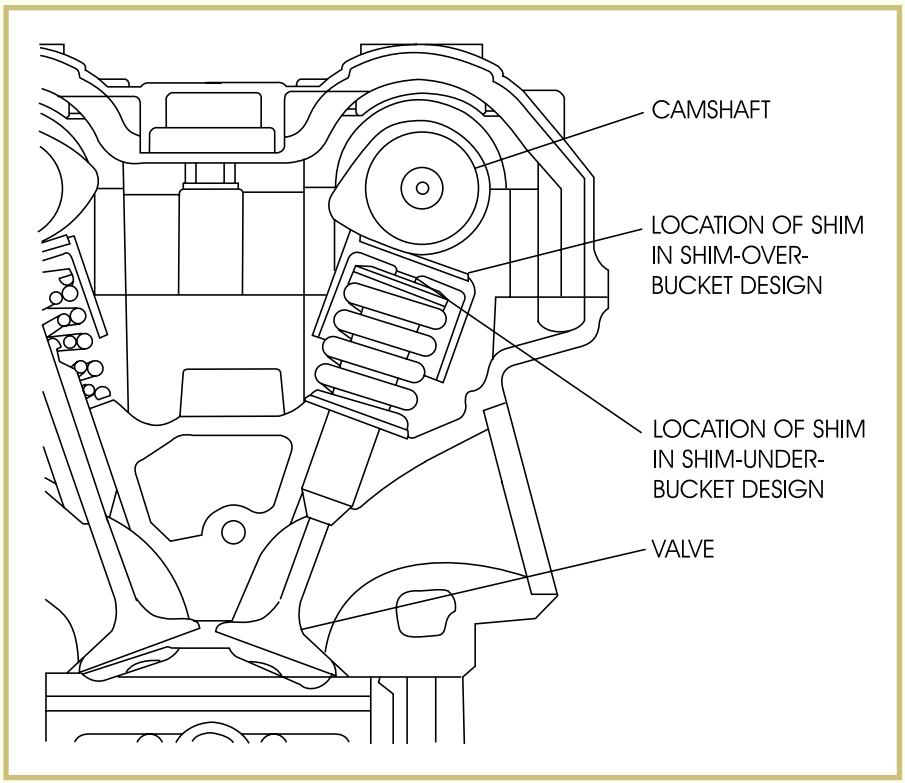

FIGURE 15—This illustration shows a hydraulic adjuster valve (tappet), which automatically adjusts for proper valve clearance. (Copyright by American Honda Motor Co., Inc. and reprinted with permission)

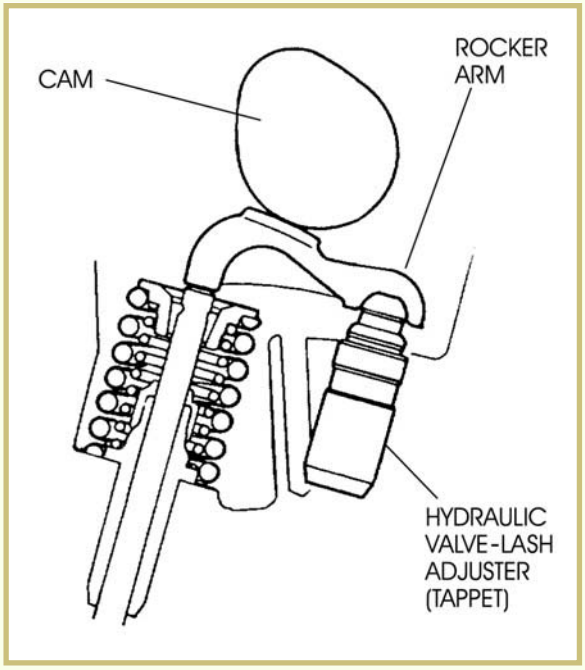

Valve Adjustment Specifications

The service manual for a motorcycle or ATV has the manufacturer's recommended specifications for valve adjustments. A good technician doesn't try to remember these specifications, but refers to the manual for this information each time it's needed. There are too many models to remember the specifications of each engine. It would be very easy to confuse the specifications of one model with those of another, causing a bad valve adjustment and creating a possible engine performance problem.

Power-Valve Inspection (Two-Stroke Engines)

Two-stroke engines that use a power valve need maintenance on a regular basis. As we mentioned in an earlier study unit, there are several different types of *power valves*. Power-valve systems are all designed to do the same thing—they increase the two-stroke engine's power band. They just have different designs.

All power-valve systems need to have the carbon deposits removed from the system. To remove all carbon deposits, you'll need to use a wire brush and a high-flash point cleaning solvent. During cleaning, you should inspect all of the individual components of the power-valve system for wear or any signs of damage. If wear or damage is present, replace the power-valve component.

Manufacturers are constantly improving the power valves. Therefore, it's highly recommended that you follow the procedures given in the appropriate service manual when servicing any type of two-stroke engine power-valve system.

Clutch Adjustment

Clutch systems are either hydraulically operated or are mechanically (cable) linked. The hydraulic style of clutch needs no adjustment. On cable-operated clutch systems, however, you must check the play at the end of the clutch lever (Figure 16). If there's excessive play at the lever, the clutch drags and causes the engine to shift with apparent stiffness. A lever with too little play causes a clutch to slip. If the clutch needs a minor adjustment, you can adjust the play by using the clutch adjuster at the lever end of the clutch cable. If more than 10 mm (about ½ inch) of adjustment is required, a major cable adjustment is needed. For this, you should screw in the lever-end adjuster approximately halfway, make the major clearance adjustments using the clutch-arm end adjuster of the clutch cable as shown in Figure 17, and then fine-tune the clearance adjustment using the lever-end adjuster of the clutch cable as you did for a minor adjustment.

FIGURE 16—Measuring the Play on the Clutch Lever (Copyright by American Honda Motor Co., Inc. and reprinted with permission)

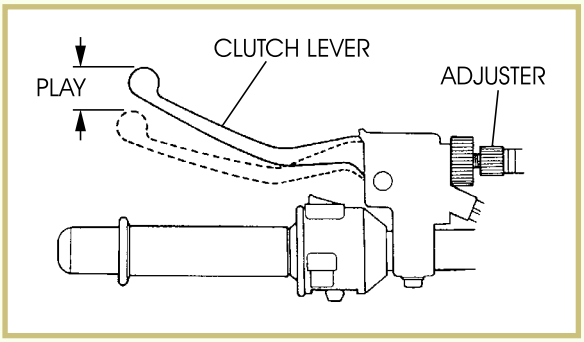

FIGURE 17—Major clutch cable play adjustments are done at the clutch arm on the engine case. (Copyright by American Honda Motor Co., Inc. and reprinted with permission)

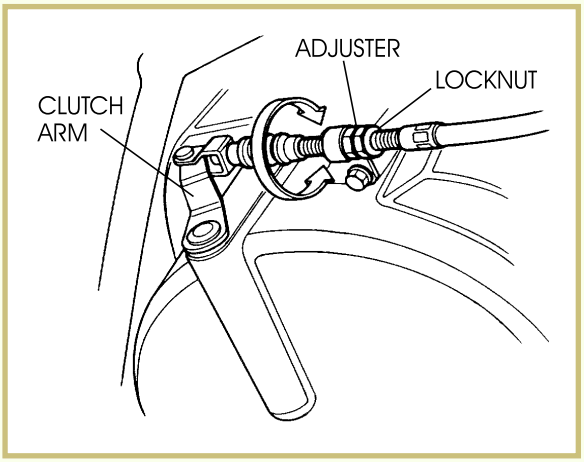

Spark Plug Inspection and Replacement

We mentioned in an earlier study unit that the spark plug is one of the easiest components to access during a tune-up. The spark plug is normally located in the center of the cylinder head and is usually visible on the outside of the engine.

Removal

Be sure to always remove any loose dirt or debris on the cylinder head, near or around the spark plug, before you remove the spark plug. It's very important to prevent any dirt from getting into the engine through the threaded hole in the cylinder head. Remember that the spark-plug wire must be disconnected before you remove the spark plug from the engine. If the engine was operated prior to the spark-plug removal procedure, you should always allow the engine to cool before attempting to remove the spark plug. Engine heat causes the cylinder head and the spark plug shell to expand. If you try to remove a plug before the engine has cooled, the spark plug may seize, and removing it could damage the cylinder-head threads. When the engine and spark plug have cooled sufficiently, the plug will be much easier to remove and there's less chance of damaging the cylinder head.

To remove the plug, use the correct-sized spark-plug socket. We mentioned in an earlier study unit that a spark-plug socket is a special socket wrench that's specifically designed for removing and installing spark plugs. The spark-plug socket has rubber inserts which protect the spark plug's ceramic insulator. The depth of the socket allows it to fit over the top of the spark plug to reach the hexagonal area of the shell. If a spark plug is tightly mounted in the cylinder head, the plug must be carefully removed to prevent it from breaking.

Inspection

After the spark plug has been removed, inspect it to determine its condition. The condition of a spark plug can tell you much about how an engine is operating. Most experienced motorcycle and ATV technicians will start out by removing and inspecting the spark plug(s) when they begin troubleshooting any type of engine problem.

When inspecting a spark plug, be sure to check the condition of the ceramic insulator. A damaged insulator can cause a spark plug to fail intermittently. This type of intermittent misfiring problem can be difficult to diagnose. It's a good idea to start with the spark plugs when you're trying to isolate an intermittent problem. You should also check for the following problems.

Wrong type of spark plug. You should first verify that the spark plug is the correct type for the engine. You can do this by referring to the service manual for the engine you're working on. After you've determined that the plug is correct, you should check the condition of the electrodes. Figure 18 identifies several different engine conditions that are revealed by inspecting the spark plugs.

Normal spark plug. Figure 18A shows a used spark plug in normal condition from a properly operating engine. Note that the bottom surface of the center electrode is flat and the surfaces of the lower electrode are squared. The electrodes are an ashy gray or light tan color from normal fuel combustion. Note also that there is no buildup of contamination on or around the electrodes.

Oil-fouled spark plug. Figure 18B shows an oil-fouled spark plug. Oil fouling will cause the plug to be saturated with oily deposits. In a four-stroke engine, an oil-fouled plug may indicate that the piston rings aren't sealing the cylinder properly, or oil may be passing through the intake valve stem. A clogged breather can cause oil-fouled plugs. Remember that a breather is a vent in the crankcase. Thus, a clogged breather prevents the crankcase from venting properly. Pressure builds up in the crankcase, which can cause oil to be forced up past the piston rings and into the combustion chamber. Any oil in the combustion chamber can foul the spark plug, especially if the compression in the cylinder is below specifications. Oil fouling can also be caused by too much oil in the fuel-and-oil mixture. Examples of this condition were given in an earlier study unit dealing

with ignition systems. Oil-fouled spark plugs are more common in two-stroke engines. Remember that in a two-stroke engine, the fuel and oil are premixed in the crankcase. Thus, oil fouling is a potential byproduct of any two-stroke engine operation.

Fuel-fouled spark plug. Figure 18C shows a spark plug that was fouled by excessive fuel. Fuel fouling (also called carbon fouling), is indicated by dry, black, fluffy carbon deposits on the spark plug electrodes. Fuel fouling is most often caused by prolonged operation with a fuel-and-air mixture that's too rich. This is usually caused by a carburetor adjustment problem. A blocked or faulty exhaust valve can also cause fuel fouling. You'll probably be able to smell fuel on the spark plug if the fuel-fouling problem is severe. An engine with the choke that's left on for too long an interval can also cause fuel-fouled spark plugs.

Bridged-gap spark plug. Both oil fouling and fuel fouling can cause a spark plug condition known as a bridged gap (Figure 18D). In this situation, carbon or oil deposits build up in the spark plug electrode gap until the gap becomes blocked. A bridged gap will prevent the spark plug from firing properly, resulting in poor engine performance or an engine that won't start.

Electrode-eroded spark plug. After many hours of use, spark plug electrodes will begin to erode. When erosion occurs, the center electrode will appear rounded and the side electrode will have a curve on the inside surface. In comparison, a new spark plug has electrodes with flat surfaces. Spark plugs that have eroded electrodes should be replaced.

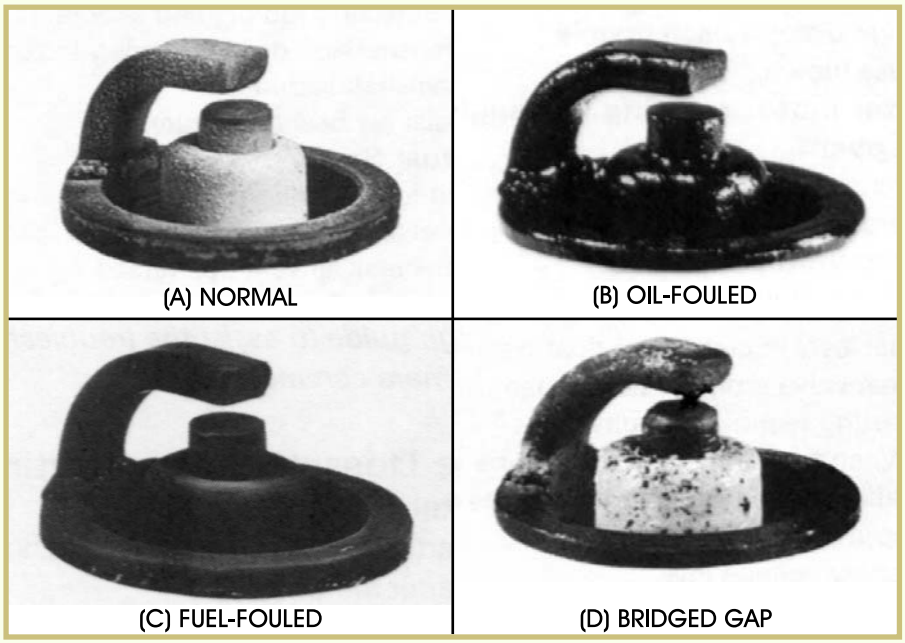

FIGURE 18—Normal and damaged spark plugs are shown here. Figure 18A shows a normal spark plug from a well-tuned, properly operating engine. Figure 18B shows an oil-fouled spark plug. Figure 18C shows a fuel-fouled spark plug. Figure 18D shows a spark plug with a bridged gap. (Courtesy of Kawasaki Motor Corp., U.S.A.)

Spark plug gap. The gap between the electrodes must be correct for the spark plug to operate properly. Before you install a spark plug, you should measure the gap between the electrodes. The service or owner's manual for the engine gives the dimension for the proper spark plug gap. The sparkplug gap can be checked by using a gapping tool which we described in an earlier study unit. Before measuring the spark plug gap, check the manufacturer's manual to determine the correct gap. Figure 19 shows a spark plug gap being measured with a gapping tool.

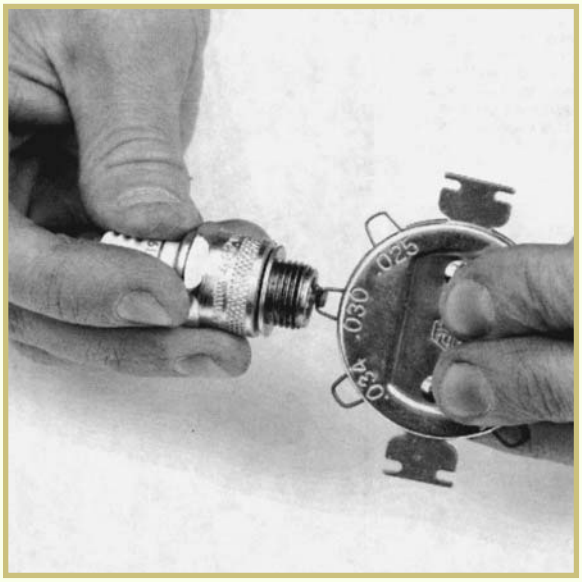

FIGURE 19—If the gapping-tool wire slides between the electrodes with slight resistance, the gap is set correctly.

Cleaning

Never sand or file the spark plug electrodes and then reinstall the spark plug in an engine. Using sandpaper or a file leaves tiny grooves on the electrodes. These grooves will either burn off or will collect deposits when the engine is operated. Sanding and filing also leaves tiny particles of sand or metal on the electrodes. These particles can get into the engine's cylinder and cause serious damage.

Previously, some spark plug manufacturers produced small sandblasting machines designed to clean their spark plugs. However, motorcycle and ATV manufacturers strongly recommend against using these sandblasters for the reasons we've just described. Remember, spark plugs are relatively inexpensive. If you're ever in doubt about a spark plug's condition, simply replace it.

Installation

To reinstall the old spark plug, or to install a new one, hold the plug with your fingers and gently screw the plug into the threaded cylinder-head opening. Don't force the spark plug. The plug should turn at least two full turns into the cylinder head before it shows any

signs of resistance. When the resistance point has been reached, use a spark-plug socket to tighten the plug into the cylinder head. Be sure to tighten the spark plug to the manufacturer's specifications, which is normally in the range of 15 foot-pounds. Use a torque wrench to tighten the spark plug.

Battery Inspection and Replacement

As we mentioned in an earlier study unit, you should be very careful when working with batteries. Always wear safety glasses. Battery acid can cause severe burns if it contacts your skin, and will damage clothing. If you accidentally spill any battery acid, the spill should be cleaned up immediately. Use a water and baking soda solution to clean the spill area. This combination helps neutralize the acid.

Inspection and Cleaning

If the motorcycle or ATV has a battery, the battery should be inspected for cracks in the casing, broken terminals, or other signs of damage. This includes checking for sulfation or warping on the internal plates. If any of these conditions are found, the battery should be replaced. You should also ensure that the battery cable connectors make good contact with the battery terminals. If the cable connectors or terminals are corroded or loose, clean and tighten the connections. As we explained earlier, battery cables are cleaned with a wire brush. An application of dielectric grease on the cable connectors and battery terminals helps to prevent future corrosion.

Electrolyte Testing

The electrical condition of a battery is determined by measuring the specific gravity of the battery's electrolyte. The specific gravity is measured with a hydrometer (Figure 20). The electrolyte should have a specific gravity of 1.280 to 1.320 (depending on the air temperature). As the battery becomes discharged, this reading decreases.

Refilling

Remember that batteries are filled with an acid and distilled water-electrolyte solution. The acid in the battery won't evaporate, but the water does. When refilling batteries, add only distilled water. Distilled water should be used to prevent minerals and other impurities from contaminating the sulfuric acid and the lead plates in the battery.

FIGURE 20—Checking a Battery's Electrolyte with a Hydrometer (Copyright by American Honda Motor Co., Inc. and reprinted with permission)

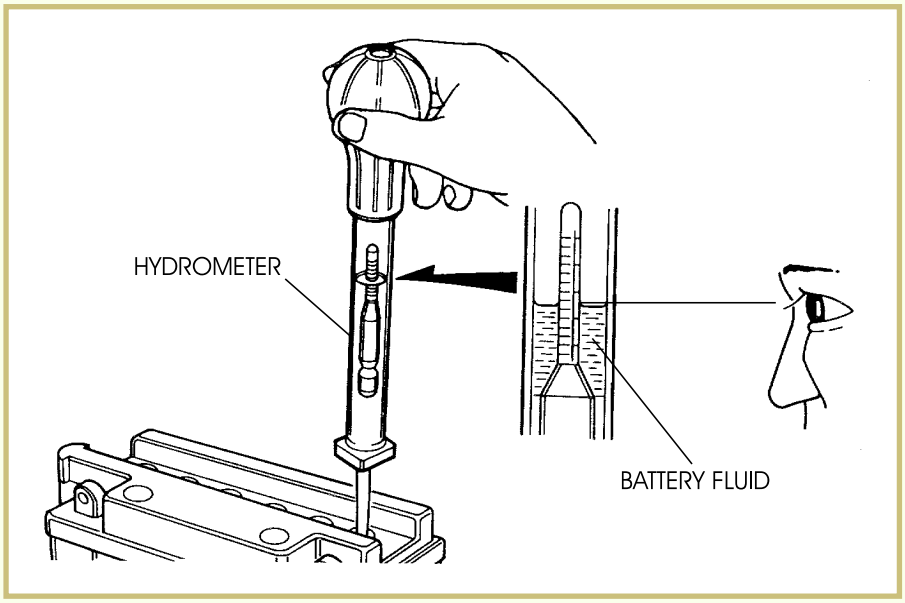

Maintenance-Free Batteries

Many motorcycles and ATVs have maintenance-free batteries. This type of battery doesn't require fluid level checks because the battery is completely sealed. Most maintenance-free batteries are equipped with some type of "magic eye" or other indicator that's used to check the charged/discharged condition of the battery. If this type of battery fails to hold a charge, it's probably defective. Before replacing a maintenance-free battery, the charging and regulating circuits should be thoroughly tested. Maintenance-free batteries were covered in an earlier study unit.

Ignition System Inspection and Adjustment

The ignition of the fuel must occur at the proper time during the compression cycle for a motorcycle or ATV engine to develop full power. Because the fuel takes some time to start burning, the spark must occur shortly before the piston starts the power stroke. In almost every engine, the spark occurs when the piston is still moving upward on the compression stroke. Motorcycle and ATV engines have one optimum ignition timing setting that's determined by the manufacturer. This ignition timing setting is listed in the service manual for the engine. If the ignition timing varies from this optimum setting, the engine will lose efficiency and power.

Some engines are designed so that you can adjust the ignition timing while the engine is running. This type of dynamic timing adjustment requires using a special device called a *timing light*. Some varieties of timing lights are connected directly between spark plugs and the spark plug wires, while other types use an indirect pickup coil.

Each time the spark plug fires, the timing light produces a flash of light. The *stroboscopic effect* of the timing light freezes the rotating timing marks. This allows you to observe and accurately adjust the timing of the ignition system. Engines that can be timed dynamically usually have spark-advance mechanisms. These mechanisms have three timing marks as Figure 21 illustrates—a top-dead-center (TDC) mark, a fire mark, and an advance mark.

FIGURE 21—An Illustration of Ignition-Timing Marks
(Courtesy of Kawasaki Motor Corp., U.S.A.)

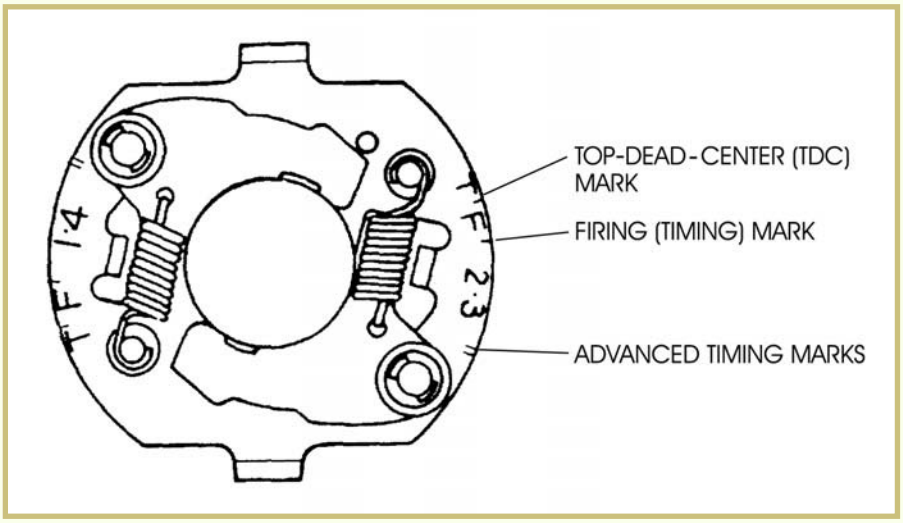

Adjusting the Timing on a Typical Ignition System

To check and adjust the timing of a dynamically adjustable ignition system, perform the steps that follow.

Note: The illustrations used in the following example procedure are courtesy of the American Honda Motor Co., Inc. and reprinted with permission.

1 Adjust the point gap according to the manufacturer's specifications. If this requires removing the flywheel, the flywheel will have to be reinstalled before the timing can be checked.

2 Locate the timing marks. On some engines, an inspection cover or plug must be removed to expose the flywheel timing marks. Accent the timing marks with chalk to make them easier to see.

Install the timing light, following the instructions provided with the light.

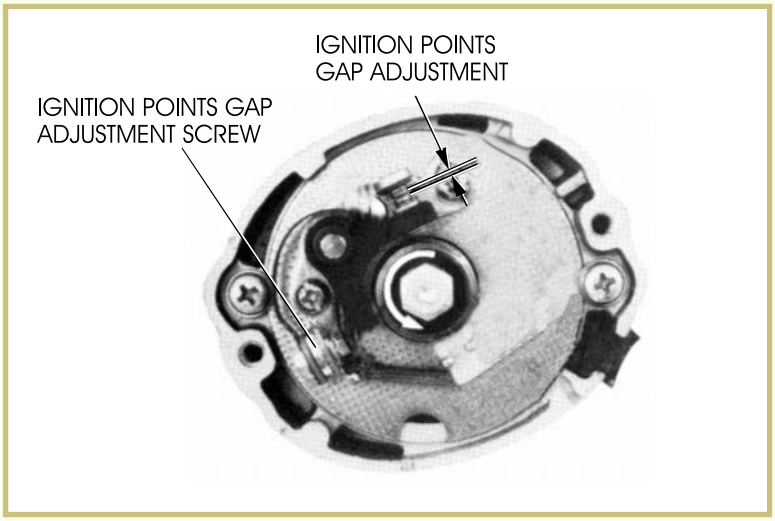

Start the engine and run it at idle speed. This speed varies depending upon the engine. Consult the manufacturer's service manual or owner's manual for the proper speed setting. The best results are obtained if a tachometer is used to measure the engine speed.

5 Aim the timing light beam at the timing marks. The light flashes each time the spark plug fires, creating a stroboscopic effect. This freezes the rotating marks. The timing marks will appear to be stationary. If the timing marks are properly aligned, the timing is correct. If they're not aligned, the timing needs to be adjusted.

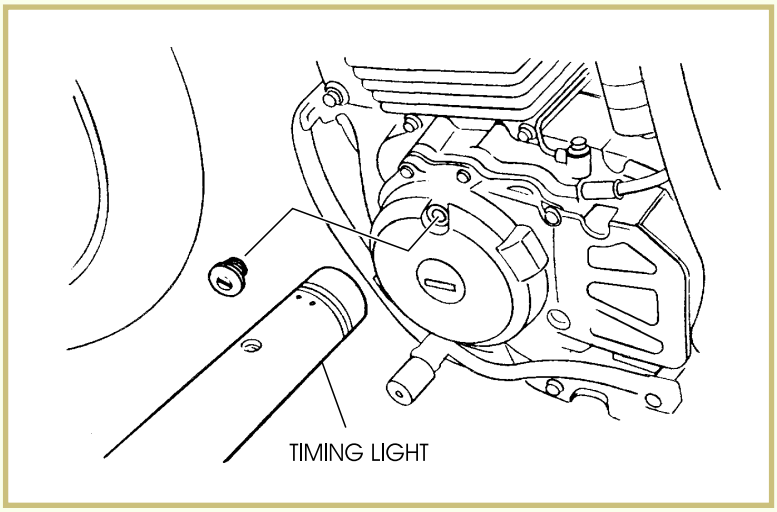

Engines with a provision for dynamically checking the ignition system timing usually have a means for adjusting the timing. The method varies depending on the engine and the type of ignition system. Externally mounted points are usually adjusted by loosening the locking screws and rotating the points assembly around the cam with a screwdriver. Make the necessary adjustments to advance or retard the spark plug firing time until the timing marks are perfectly aligned in the timing light beam.

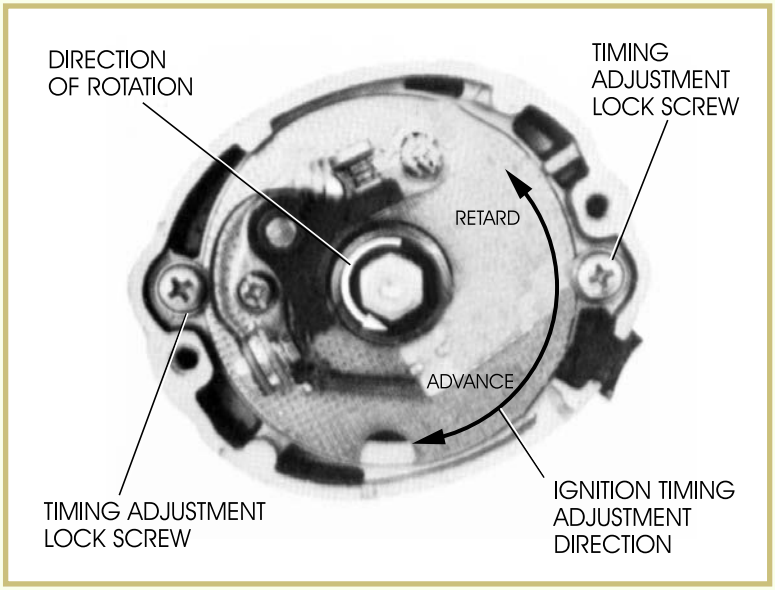

Electronic Ignition Systems

Most modern motorcycles and ATVs use nonadjustable electronic ignition systems. These systems have the correct timing built into the electronic components. It's possible to check for proper ignition operation with a timing light. However, in most cases, the ignition system timing is either correct, or the electronic ignition system won't function at all. In these cases, component replacement is required to correct the problem. Because the new electronic ignition systems use no moving parts, it's a rare occurrence to see a timing problem with them.

Carburetor Adjustment

All carburetors have an idle adjustment screw (Figure 22) for setting the idle speed. The correct idle speed is listed in the appropriate manufacturer's service manual.

FIGURE 22—This illustration shows the idle adjustment screw. (Copyright by American Honda Motor Co., Inc. and reprinted with permission)

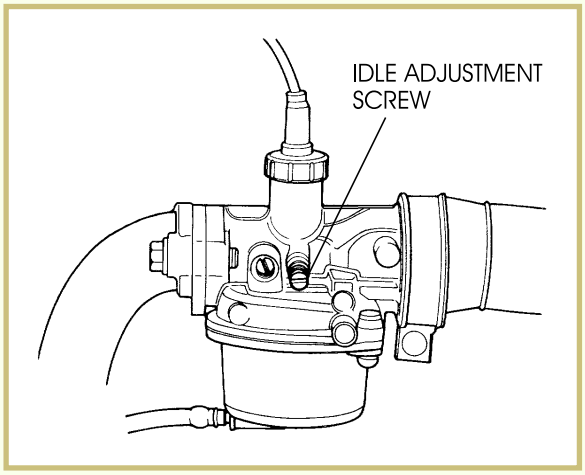

Carburetor Synchronization

The operating temperature, smoothness, response, and fuel mileage of a multicylinder motorcycle engine depend on proper carburetor synchronization. This is especially critical to the performance of a multicylinder engine that has one carburetor per cylinder. The physical linkages and mounting methods vary from model to model, but the basic principles of carburetor synchronization are the same for all multiple-carburetor engines. *Carburetor synchronization* is the process of balancing the output of two or more carburetors so that the amount of fuel-and-air mixture drawn through each one is equal. This is checked by measuring the engine vacuum at each carburetor intake manifold.

To synchronize a multiple-carburetor assembly, you must first install a set of vacuum gauges to the intake manifolds of the engine. This is done by removing the plugs from each cylinder head port and installing the appropriate adapters as shown in Figure 23, and then installing the vacuum gauges as shown in Figure 24.

FIGURE 23—Carburetor synchronization adapters are shown in this illustration. (Copyright by American Honda Motor Co., Inc. and reprinted with permission)

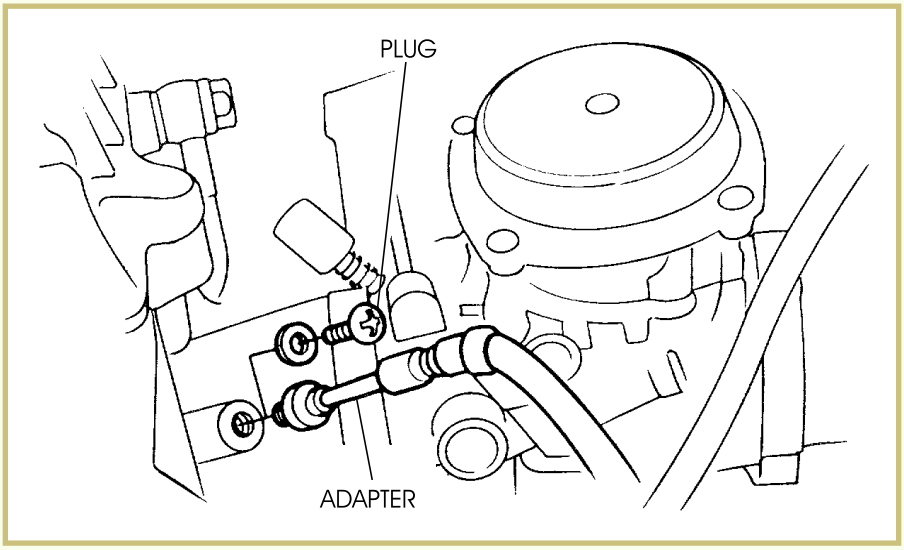

FIGURE 24—Vacuum Gauges Installed to Check Carburetor Synchronization (Copyright by American Honda Motor Co., Inc. and reprinted with permission)

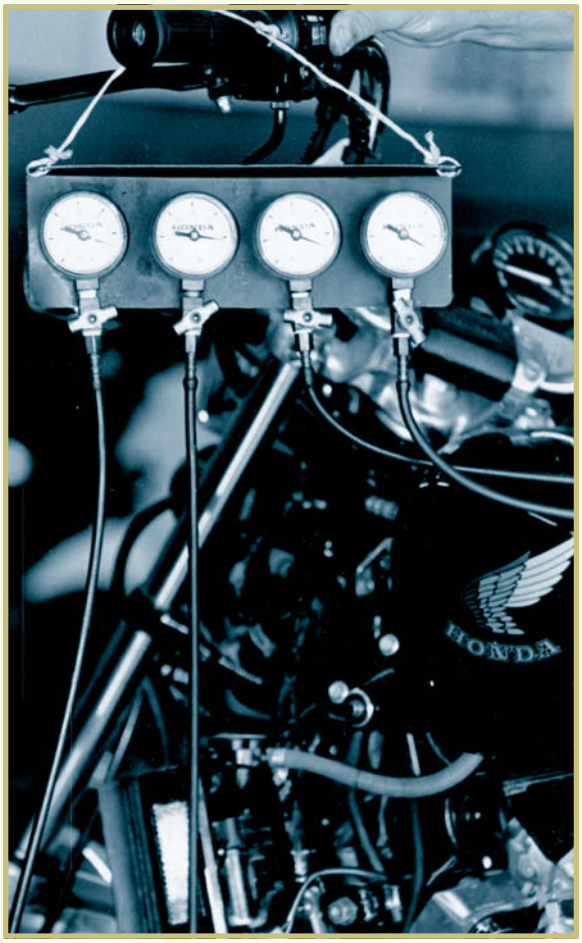

The basic procedure to synchronize a set of carburetors is as follows:

1. Adjust the engine idle speed to the manufacturer's specifications.
2. Turn the synchronization screws (Figure 25) so that the vacuum between the base carburetor (that's the carburetor with the idle adjustment screw) intake port and each of the other carburetor intake ports is within factory specifications. It's a good habit to adjust the carburetors so that they all show exactly the same vacuum. This results in the smoothest-running engine.
3. Check that the carburetor synchronization adjustment is stable by snapping the throttle control handle several times. This will accelerate the engine and then drop it down to idle speed.
4. When all of the carburetors have been synchronized, check the idle speed and verify that it's still within specifications.

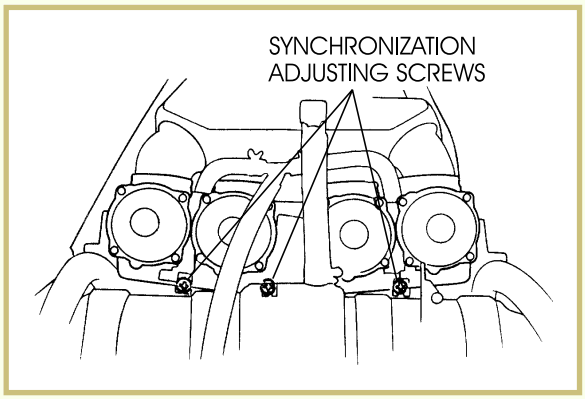

FIGURE 25—This illustration shows the carburetor synchronization adjusting screws. (Copyright by American Honda Motor Co., Inc. and reprinted with permission)

Air Filter Inspection

It's very important that you understand and appreciate the importance of motorcycle and ATV air filter maintenance. The carburetor air filter is frequently overlooked during maintenance. The air filter is very important for prolonging the life expectancy of the engine. If dirt and other contaminants are allowed to flow through the carburetor with the fuel-and-air mixture, it will damage the engine's internal parts.

Air filters are installed in an air box (Figure 26). We'll discuss the different types of air filters next.

Paper Air Filters

As we discussed in an earlier study unit, the most commonly used motorcycle and ATV air filter is the paper filter. This filter consists of laminated paper fibers that are sealed at the ends or sides of the filter. Some paper air filters include supporting inner or outer metal screen shells. The paper used in these air filters is molded in a "W" pattern

as shown in Figure 27. This molded "W" is designed to increase the surface area and to decrease the restriction of air passing through the filter.

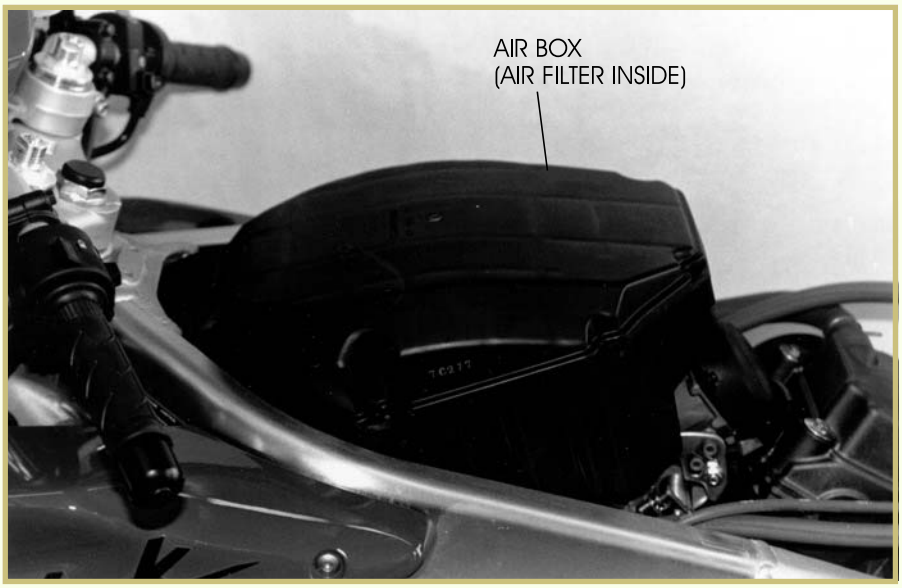

FIGURE 26—This illustration shows a motorcycle air box.

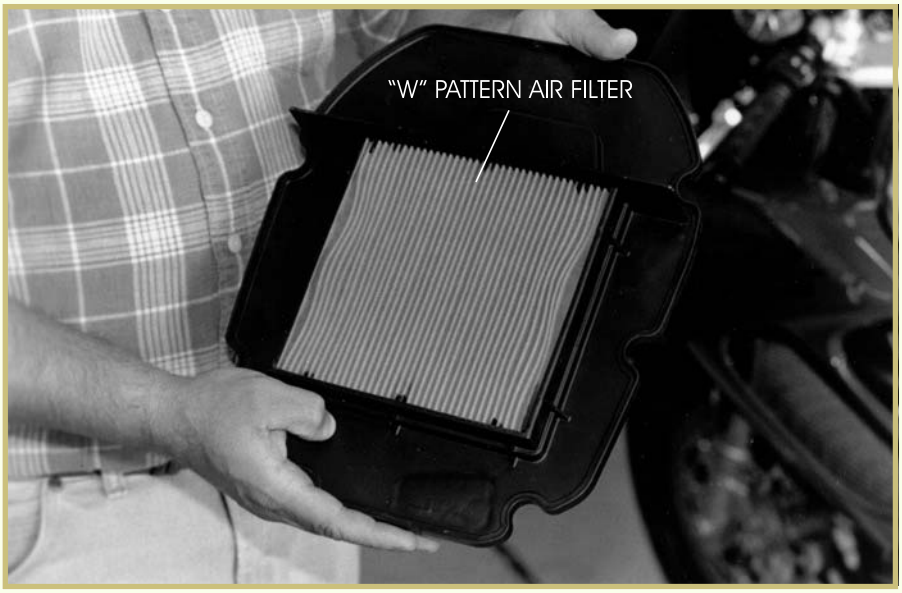

FIGURE 27—A Paper-Type Air Filter

The paper air filter must be kept dry and free of oil. If the paper air filter becomes excessively dirty or contaminated with oil, it must be replaced. Don't try to clean a paper air filter with soap and water because this will damage the paper fibers and cause the filter to fail. You should use compressed air to clean a paper air filter as shown in Figure 28. Be careful not to damage the filter.

FIGURE 28—Cleaning a Paper-Type Air Filter Using Compressed Air

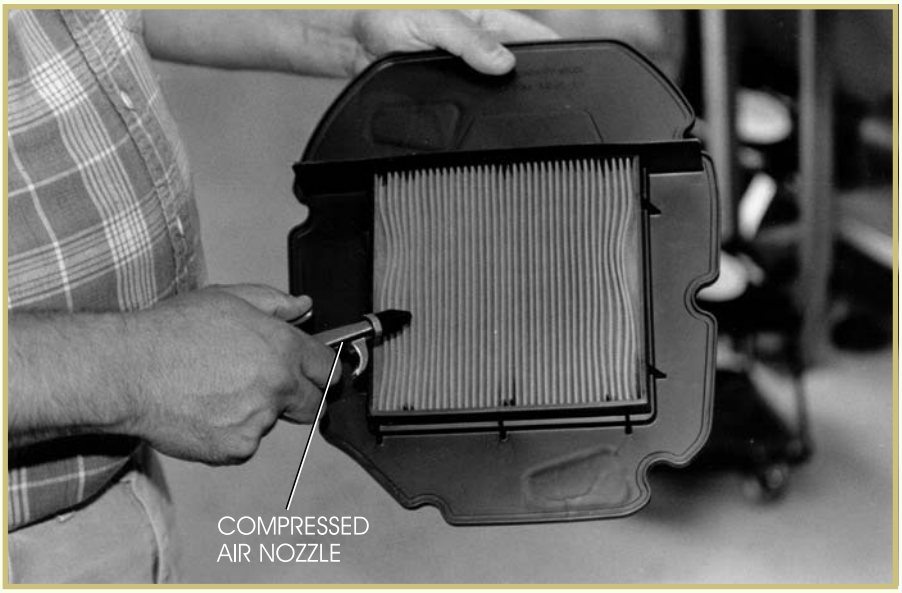

Foam Air Filters

Figure 29 shows a foam-type air filter. It uses a special foam and oil to trap dirt and other contaminants. When this type of filter is dirty, you can clean it in a warm, soapy water solution, rinse it, and dry it. When the filter has dried, you must apply a special oil specifically made for foam air filters. Excess oil must then be squeezed out of the filter.

FIGURE 29—A Foam-Type Air Filter

Gauze Air Filters

Figure 30 shows a gauze-type air filter. This filter is very similar to the paper air filter. Surgical-type gauze is used to trap the dirt as the air passes through the filter. When this type of filter gets dirty, you can

clean it in warm soapy water, rinse it, and dry it. After drying, you must apply a special gauze-filter oil when servicing this type of filter.

FIGURE 30—A Gauze-Type Air Filter

Road Test 2

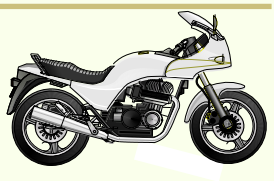

1. The specific gravity of a battery's electrolyte is measured by using a(n) _____.

2. Which test will provide a better indication of any internal engine problems, leakdown or compression?

   _____

3. *True or False?* A telltale hole separates the engine oil and coolant and can be found in an air-cooled engine.

4. A spark plug with carbon or oil deposits that block the gap between the center and the side electrodes is known as having a(n) _____ .

5. *True or False?* It's acceptable to sandblast a spark plug and then reuse it in a motorcycle or ATV engine.

6. Most modern motorcycles and ATVs use nonadjustable electronic _____.

7. If a clutch lever has excessive play, the clutch will _____ and will make the engine shift with apparent stiffness.

8. A clutch lever that has too little play will result in a clutch that _____.

(Continued)

Road Test 2

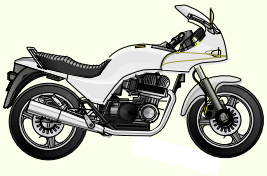

9. *True or False?* Most four-stroke motorcycle and ATV engines use the same oil to lubricate the engine, the transmission, and the clutch components.

10. *True or False?* A two-stroke engine uses intake and exhaust valves that must be adjusted while the engine is at room temperature.

11. Many modern motorcycles and ATVs use _____ batteries that don't require fluid-level checks.

Check your answers with those on page 51.

EMISSION CONTROLS, OPERATION, AND MAINTENANCE

A technician performing engine maintenance on any modern street-legal motorcycle will very likely be working with some type of emission-control system. In an earlier study unit, we discussed the chemical changes that occur in an internal-combustion engine. During combustion, the fuel-and-air mixture that burns in the engine produces chemical gases.

- *Carbon monoxide (CO)* is the result of partial combustion. As we mentioned in an earlier study unit, carbon monoxide is a colorless, odorless, poisonous, and potentially deadly gas.
- *Hydrocarbons (HC)* are the unburned (raw or vaporized) fuel.
- *Carbon dioxide (CO_2)* is a gas that results from complete combustion of the fuel.
- *Oxides of nitrogen (NO_x)* are oxidized nitrogen gases resulting from extremely high combustion temperatures.
- *Water (H_2O)* is a byproduct of combustion. Every gallon of burned fuel produces approximately one gallon of water in a vaporized form.

Emission-Control Standards

In the United States, the Environmental Protection Agency (EPA) has developed emission standards for street-legal motorcycle manufacturers to follow. Since 1978, motorcycles designed for street use have had to comply with all EPA emission standards. The EPA has also established and regulates acceptable noise levels as part of the emission-control standards.

Emission-Control Systems

We'll discuss the basic operation and maintenance of several emission-control devices found on motorcycles. It should be noted that emission-control systems used on street-legal motorcycles won't significantly reduce the power output of motorcycle engines. The following are the emission controls used to reduce street-legal motorcycle exhaust emissions.

- Crankcase-emission controls
- Evaporative-emission controls
- Exhaust-emission controls
- Noise-emission controls

Crankcase-Emission Controls

The engine crankcase has an emission-control system attached to the crankcase breather that prevents the hydrocarbons produced inside of the crankcase from making direct contact with the atmosphere. In most cases, it's done by routing the crankcase breather tube through the air box. This re-breather arrangement allows the raw hydrocarbons from the crankcase to be recycled into the combustion chamber and burned during normal combustion. An air-and-oil separator allows condensed crankcase vapors to accumulate. This separator must be checked and emptied periodically. The breather tube has a transparent section on it to indicate when there's oil in the tube. This tube should be closely inspected if the engine is overfilled with oil or if the vehicle is accidentally tipped over. A typical crankcase-emission control system is shown in Figure 31.

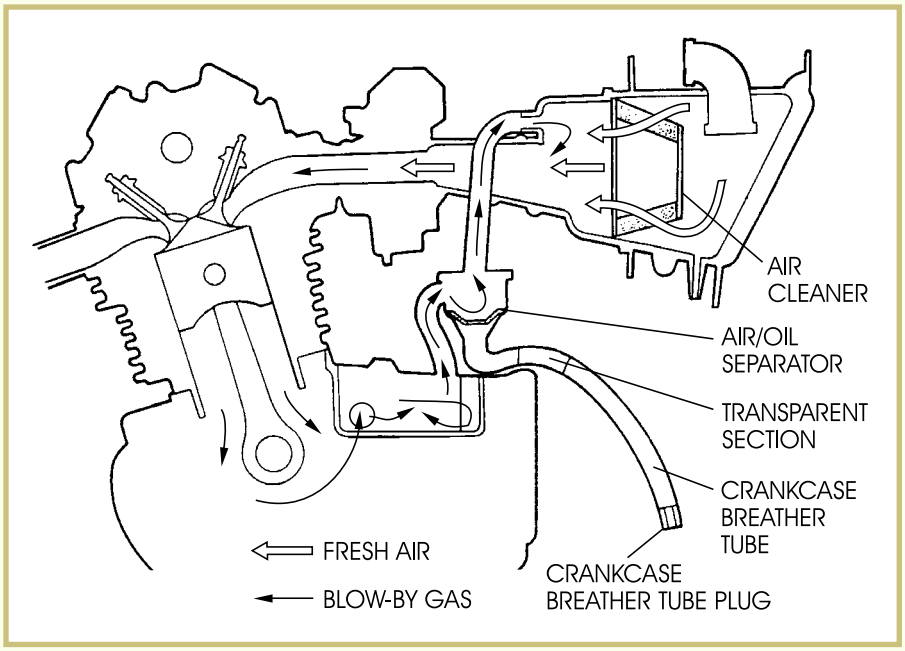

FIGURE 31—This illustration shows a typical crankcase-emission control system. (Copyright by American Honda Motor Co., Inc. and reprinted with permission)

Evaporative-Emission Controls

Motorcycles sold in California that are designed for street use must comply with California Air Resources Board (CARB) requirements for evaporative-emission regulations. Although evaporative-emission controls are required by law in California, many manufacturers are starting to build street-legal motorcycles for use in other states that comply with these requirements.

Evaporative emissions come from the gasoline in the fuel tank. Gasoline vapors are pure hydrocarbons. When the engine isn't running, these vapors are routed into a charcoal canister (EVAP canister). In the canister, the vapors are absorbed and stored (Figure 32). When the engine is running, the vapors are routed through the carburetor and into the engine via a purge-control valve (EVAP purge-control valve). The evaporative-emission carburetor air-vent control valve (EVAP CAV control valve) is opened to allow air to be drawn into the carburetor through the valve. A diagram of a typical evaporative-emission system is shown in Figure 33.

FIGURE 32—Charcoal Canisters—Assembled and Disassembled

Maintenance of the evaporative-emission control system includes checking all hoses within the system for cracks and loose connections, and checking for airflow through the purge-control valve (Figure 34). The charcoal canister should also be inspected for cracks or other damage. The charcoal canister must be replaced if the motorcycle is ever tipped over and the canister becomes contaminated with raw gasoline.

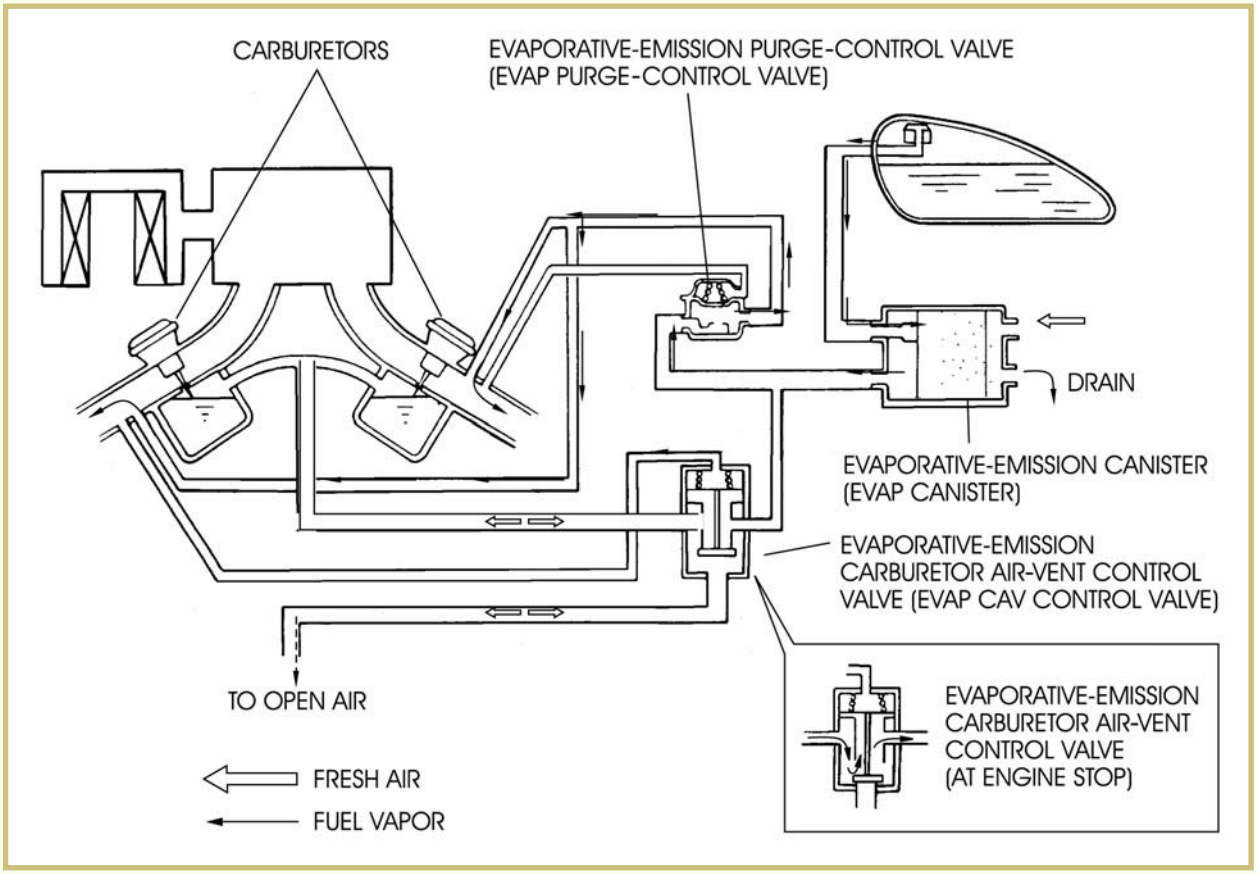

FIGURE 33—An evaporative-emission control system diagram is shown here. (Copyright by American Honda Motor Co., Inc. and reprinted with permission)

FIGURE 34—Testing an Emission-Control System Purge-Control Valve
(Copyright by American Honda Motor Co., Inc. and reprinted with permission)

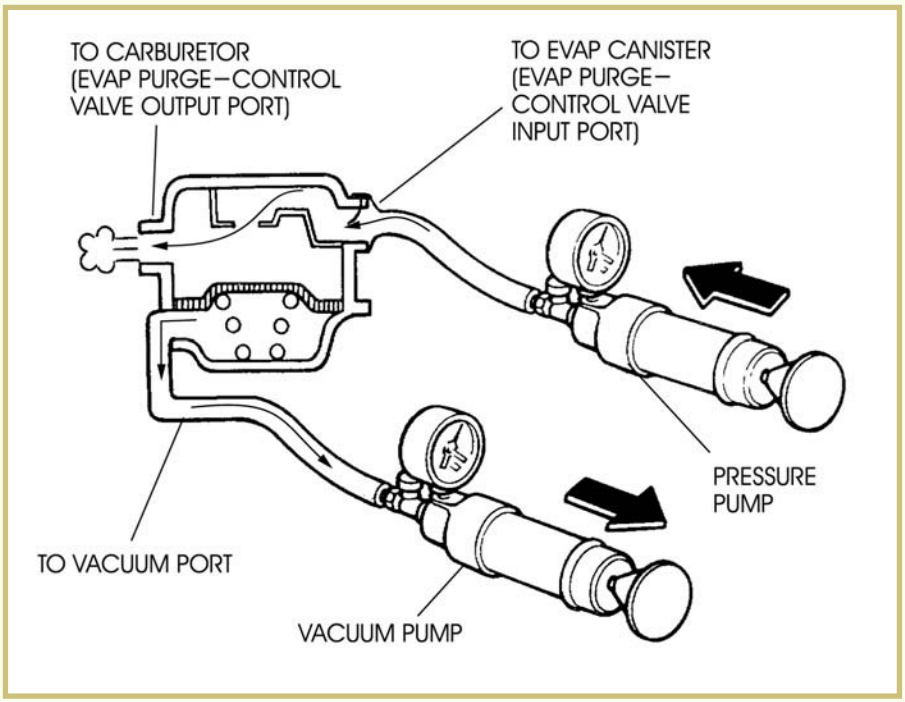

Exhaust-Emission Controls

Motorcycle exhaust emissions are controlled by two methods. The first method is by creating a lean-burning condition through the carburetor system. This creates less pollution because combustion is more complete and efficient. The second method is by using a system that introduces filtered air into the exhaust system via the exhaust port. Figure 35 shows this system as it's used on a Honda motorcycle. Honda calls their system a "Pulse Secondary Air Supply System" (PAIR). This type of emission-control system allows fresh air to be drawn into the exhaust port whenever there's a negative pressure in the exhaust-port area. The fresh air is used to help complete the burning of any unburned fuel in the exhaust gases. This system also converts the exhaust hydrocarbons and carbon monoxide into carbon dioxide and water. A check valve (PAIR check valve) is used to prevent reverse airflow through the system. Another valve (PAIR control valve) is used to stop the fresh airflow from entering the exhaust system during rapid deceleration, to prevent afterburn (backfiring) in the exhaust system. This PAIR-type of emission-control system requires no adjustments, but the components should be inspected on a periodic basis.

Other motorcycle manufacturers use similar systems. Obviously, these systems have different names, but they all provide the same end result, and most are as similar to the Honda system as patents allow.

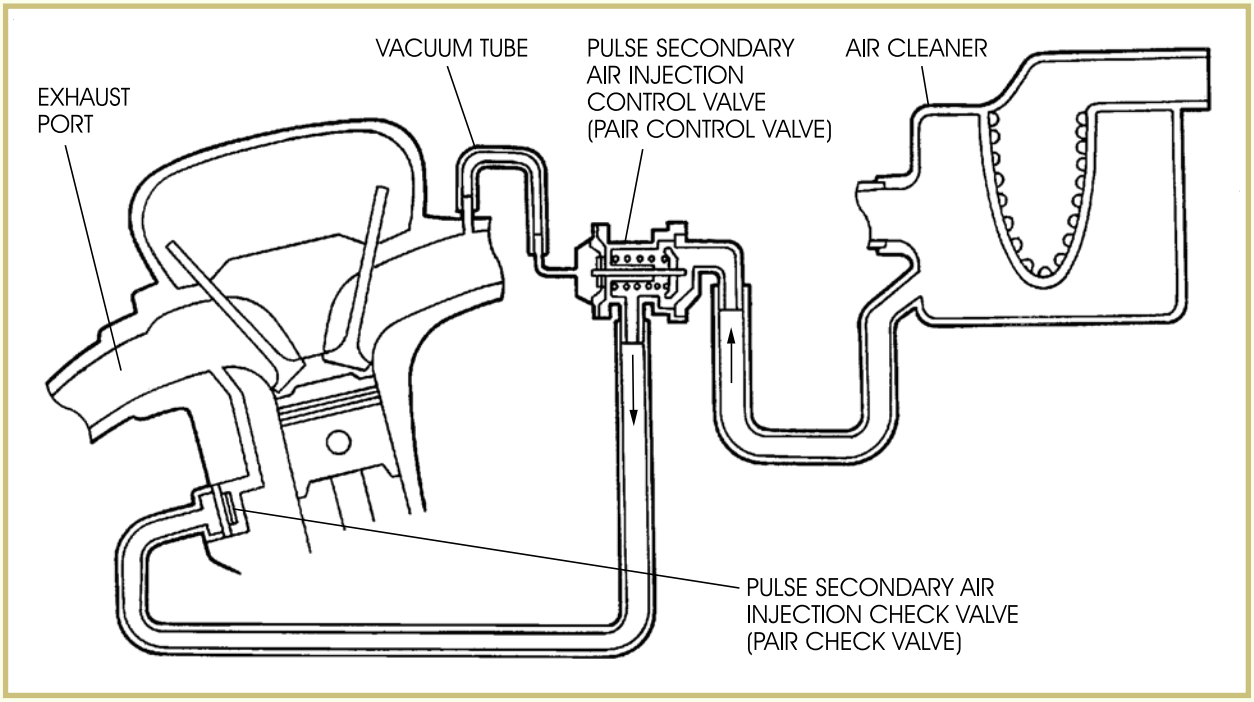

FIGURE 35—Pulse Secondary Air Supply System (PAIR) Flow Diagram (Copyright by American Honda Motor Co., Inc. and reprinted with permission)

Noise-Emission Controls

Manufacturers of all street-legal motorcycles use exhaust systems that meet EPA standards. Tampering with these exhaust systems is forbidden by law. The EPA states that federal law prohibits

- The removal or disabling of any noise-control device or element of design except for the purpose of maintenance, repair, or replacement, or
- The use of a vehicle after such device or element of design has been removed/disabled

Among those acts presumed to constitute tampering are the acts listed below:

- Removal or puncturing of the muffler, baffles, header pipes, or any other component which conducts exhaust gases
- Removal or puncturing of any part of the intake system
- Lack of proper emission-control system maintenance
- Replacing any moving parts of the vehicle, or parts of the exhaust or the intake system, with parts other than those specified by the manufacturer

As you can see, all street-legal motorcycles have emission-control systems. These control systems are designed to help keep our atmosphere clean and our neighborhoods quiet, while causing no restrictions to the vehicle's usable power.

Road Test 3

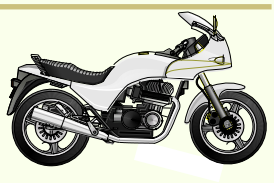

1. When an evaporative-emission control system is used, the vapors from the fuel tank are collected into a _____ when the engine isn't running.

2. An exhaust-emission control system converts exhaust hydrocarbons and carbon monoxide into what two compounds?

   _____

3. *True or False?* According to federal law, it's illegal to replace an air intake or exhaust system on a street-legal motorcycle with anything other than a system specified by the original manufacturer.

4. Crankcase breathers are routed into the _____ to prevent raw hydrocarbons from entering the atmosphere.

(Continued)

Road Test 3

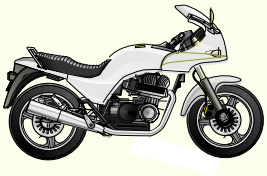

5. What are hydrocarbons?

_____

6. What is carbon monoxide?

_____

7. *True or False?* Carbon dioxide is a poisonous gas.

Check your answers with those on page 51.

MOTORCYCLE AND ATV CHASSIS MAINTENANCE

Motorcycle and ATV chassis maintenance includes cleaning, inspecting, and replacing parts that are subject to wear. The technician performing this maintenance adjusts and tunes the vehicle's chassis systems to the settings specified by the manufacturer. Chassis parts that require attention during maintenance include

- Cables and cable connections
- Steering-head bearings
- Brakes
- Wheels and tires
- Final drives
- Grease fittings

Cables and Cable Connections

Inspection and Lubrication

Cable maintenance consists of inspecting all cables for the specified amount of play and ensuring that the cables work freely and don't bind or stick. Cable maintenance also includes checking that the cables are properly lubricated. Figure 36 shows a special cable-lubricating tool that dispenses lubricant into the cable.

FIGURE 36—Applying Lubricant to Cables Using a Special Applicator Tool

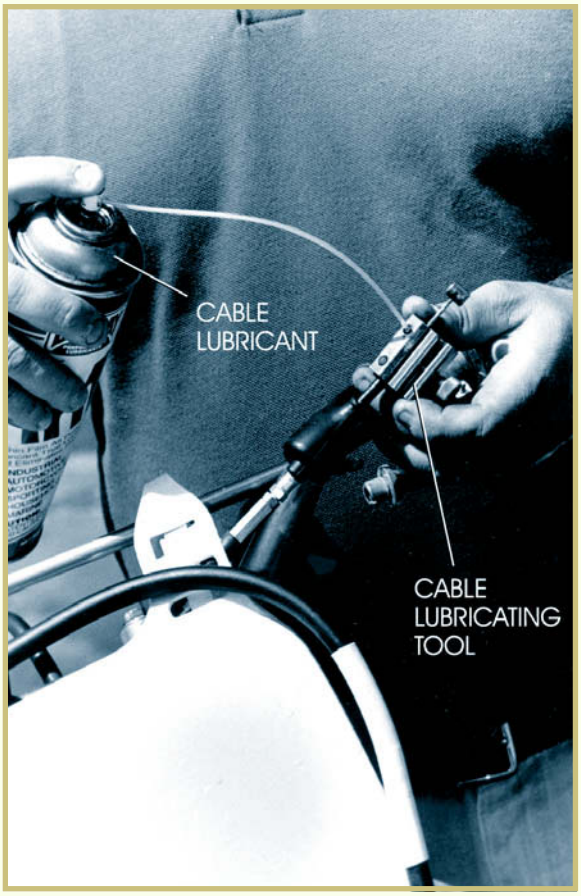

Adjustment

A throttle cable adjustment may need to be performed during cable maintenance. This adjustment consists of creating the correct amount of play between the throttle twist grip or throttle lever, and the cable, as shown in Figure 37. To change the amount of throttle play, use the throttle cable adjuster and locknut.

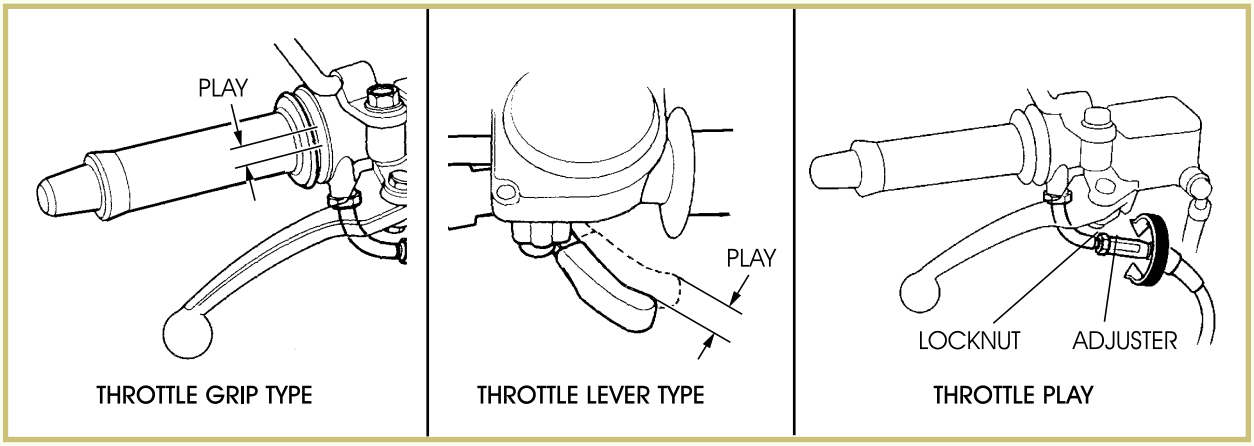

FIGURE 37—Checking Play on Throttle Grip and Throttle Lever Type Controls (Copyright by American Honda Motor Co., Inc. and reprinted with permission)

The clutch and brake cable play must also be measured (Figure 38). Adjustment to either of these cable types is made at the lever end.

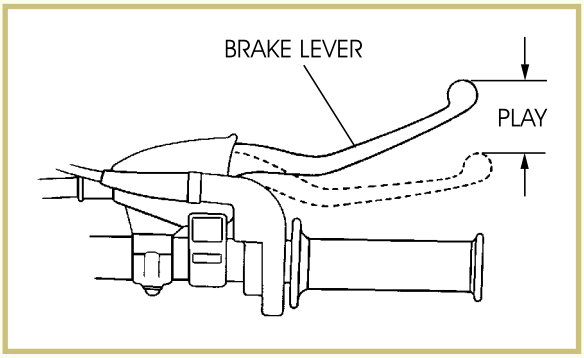

FIGURE 38—Clutch and Brake Cable Play Measurement (Copyright by American Honda Motor Co., Inc. and reprinted with permission)

Steering-Head Bearings

To check the steering-head bearings on a motorcycle, you must first securely support the machine from beneath the frame, with the front wheel off the ground and free to pivot. Typically, a jack-stand is used to hold the motorcycle in the correct position. Check for smooth movement as you turn the handlebars from left to right. If the operation isn't smooth, binds, or has a heavy feeling when you turn the handlebars, ensure that there isn't any interference from the cables or the wire harness. If the cables and wire harness aren't causing the unusual feel, check for wear or damage to the steering-head bearings. If the steering-head bearings need to be replaced, follow the bearing replacement procedures in the appropriate service manual.

Brakes

Brake system maintenance consists of inspecting the condition of the brake pads and disks and/or the brake shoes and drums. You should check for proper cable adjustment on mechanically operated brakes, and check for air in the system of hydraulically operated brakes. To check for air in a hydraulic-brake system, apply pressure on the brake lever or brake pedal and verify that no air has entered the system. If the lever or pedal feels soft or spongy when operated, this indicates air in the system; the air will need to bleed off. Refer to the appropriate service manual for brake system air-bleeding procedures.

When inspecting the brake system, also check the condition of the hydraulic fluid in the brake reservoir, as seen in Figure 39. If the fluid is low or dirty, add fluid or replace it as necessary. Caution should be taken to protect all painted and plastic parts from the brake fluid. Painted and plastic parts are subject to damage if they're exposed to brake fluid.

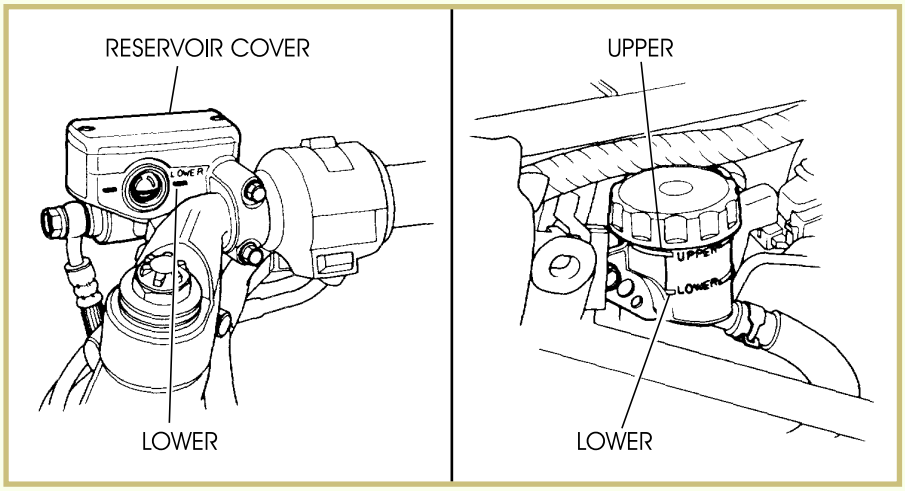

FIGURE 39—Checking Hydraulic-Fluid Reservoirs for Correct Levels (Copyright by American Honda Motor Co., Inc. and reprinted with permission)

Wheels and Tires

Wheel Bearings Check

Inspect the front and rear wheel bearings for wear and damage by checking for excessive play in each wheel—with the wheel lifted off the ground and rotated. If you notice areas where the wheel does not rotate smoothly, or produces unusual noises such as rumbling or grinding, the wheel bearings are worn or damaged and should be replaced.

Tire Inspection

Inspect the tires for unusual wear such as cupping (Figure 40). If the tires are worn beyond their service limits as determined by inspecting

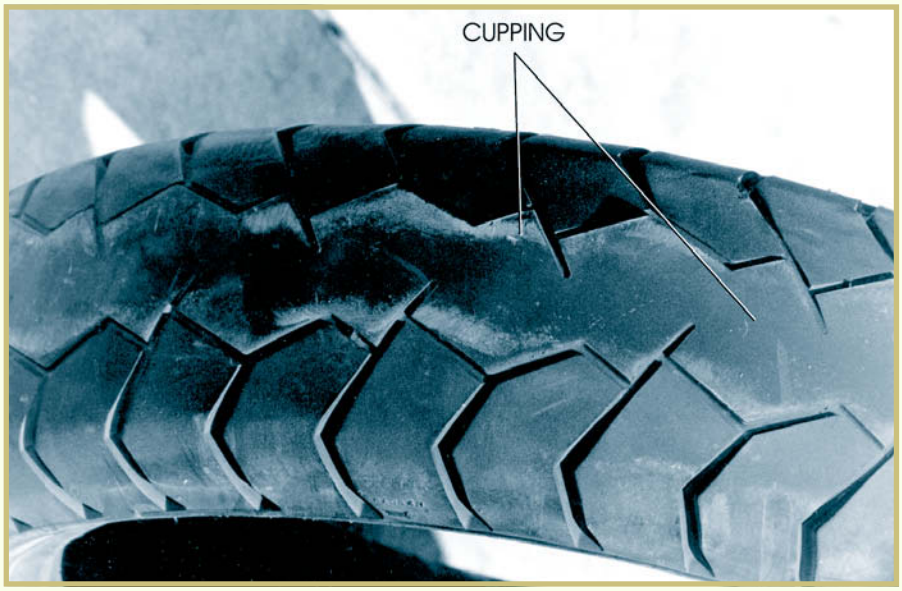

FIGURE 40—The tire in this illustration shows signs of "cupping." (Copyright by American Honda Motor Co., Inc. and reprinted with permission)

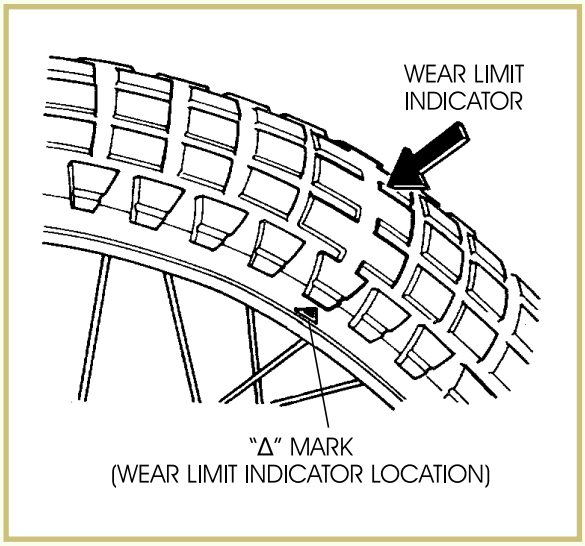

FIGURE 41—The tire in this illustration shows excessive wear, as measured at the wear limit indicator. (Copyright by American Honda Motor Co., Inc. and reprinted with permission)

the "wear limit indicators" (Figure 41) or have cracks or other signs of damage, they should be replaced with new tires.

Tire Pressure Check

Tire pressure should be checked (Figure 42) and set to the factory recommendation. You can find the recommended pressure on the tire or in the appropriate owner's or service manual. Improperly inflated tires are subject to uneven wear, and can provide a poor ride.

FIGURE 42—Measure tire pressure with a dial-type tire-pressure gauge. ((Copyright by American Honda Motor Co., Inc. and reprinted with permission)

Chain-Driven Systems

The chain-driven final-drive system is the most commonly used motorcycle and ATV drive system. The sprockets and chain of a chain-driven system do wear out with use (Figures 43 and 44).

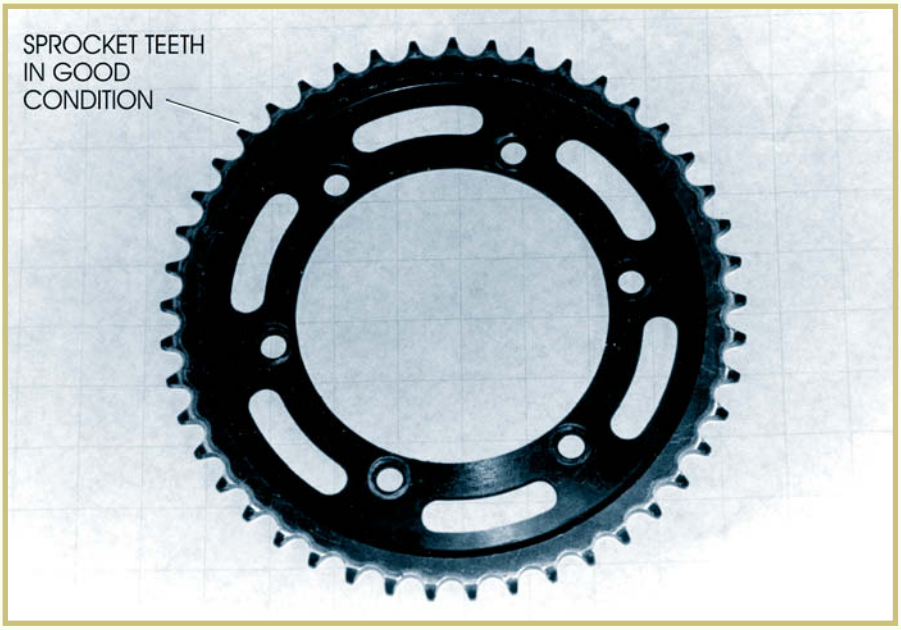

FIGURE 43—A new sprocket is shown here.

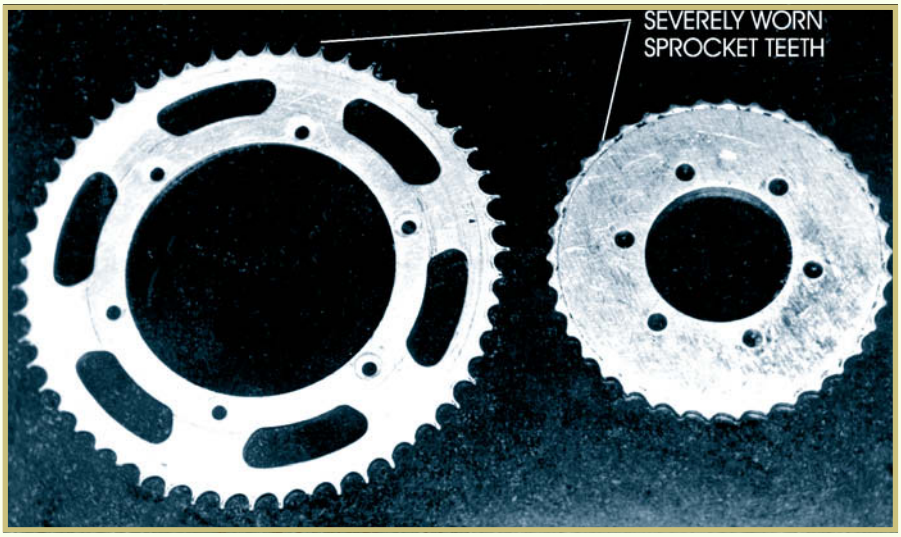

FIGURE 44—Worn sprockets are shown here.

To obtain the maximum useful life from sprockets and chains, you'll need to frequently inspect and maintain these components. The drive chain requires more frequent service than any other final-drive system component. The correct tension adjustment (Figure 45) and proper lubrication of the drive chain help to extend the useful life of the chain and sprockets.

FIGURE 45—Drive Chain Tension Adjustment Assembly

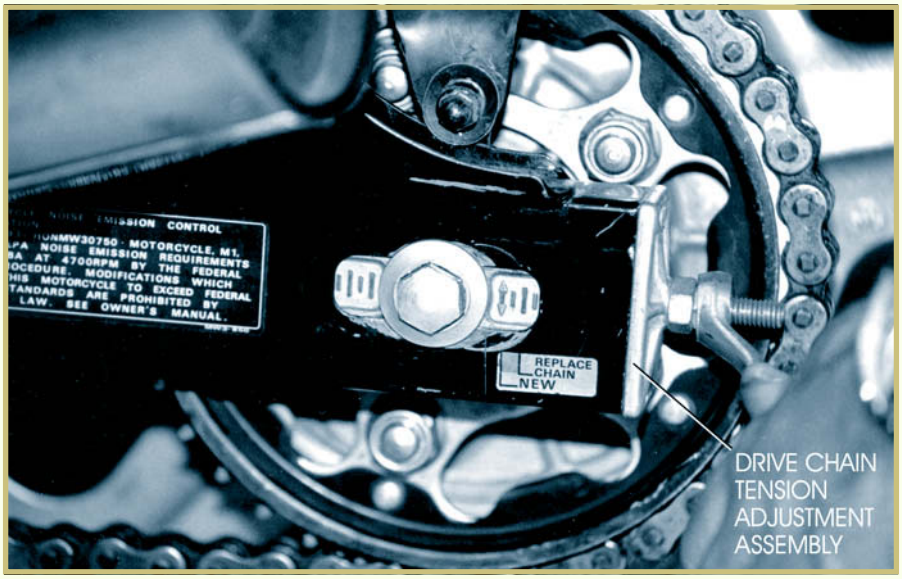

There are two ways to check a drive chain for excessive wear.

- Try to lift the chain at various points around the rear sprocket. At a point midway around the sprocket, try to pull the chain away from the sprocket. If you can lift the chain so that one-third (⅓) of a sprocket tooth shows below the chain, this indicates excessive chain wear. This chain should be replaced.
- Remove the drive chain from vehicle. Lay the chain on a flat surface and measure the length of the chain when it's compressed (pushed together) to its shortest length. Now pull on the chain to stretch it out as far as possible. If the chain stretches more than ¼ inch per foot, this indicates excessive chain wear. This chain should be replaced.

Belt-Driven Systems

Belt-driven final-drive systems are used on a few select motorcycle models. These systems use a Gilmer-type belt (Figure 46) that has teeth molded into it. The belt teeth mesh with a pair of toothed pulleys. The belt requires no lubrication, but must be kept clean and dry. This belt-driven system does have certain maintenance requirements. For instance, proper alignment of the belt and pulleys and correct belt tension are extremely critical with this type of final-drive system.

FIGURE 46—A Gilmer-type drive belt and pulley are shown here.

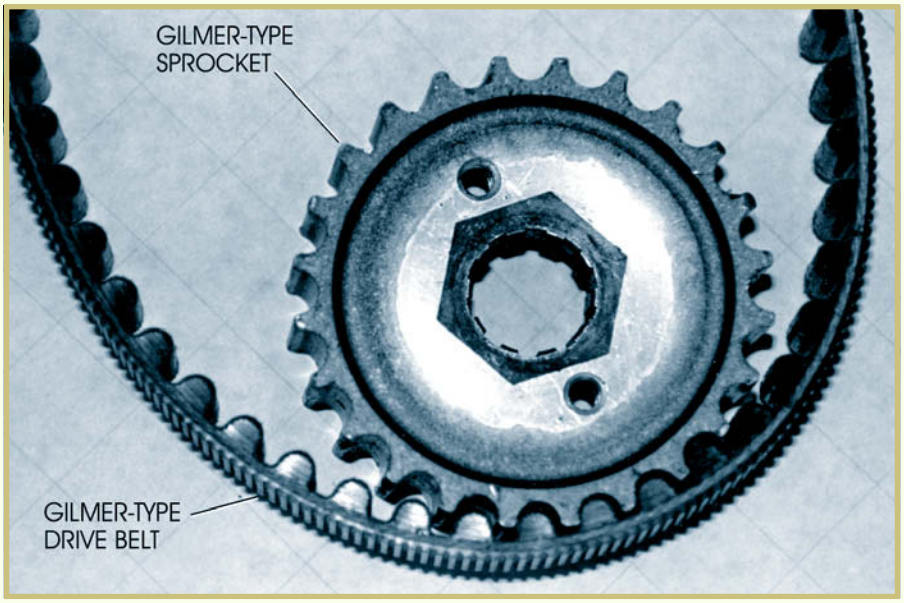

Shaft-Driven Systems

We mentioned in an earlier study unit that, even though it has the lowest mechanical efficiency, the shaft-driven final-drive system is the best overall system available for motorcycles or ATVs. Shaft-driven systems are strong, clean, and require virtually no maintenance. Shaft drives are the most reliable drive system. When properly maintained, shaft-driven systems will normally outlast the vehicle that they're used on. Shaft-driven system maintenance consists of replacing the gear oil at the appropriate mileage or time intervals.

Grease Fittings

Many motorcycles and ATVs have grease fittings located in various locations on the chassis. The most common location for grease fittings is on or around the swing-arm assembly (Figure 47). Although grease fittings are convenient, many manufacturers intentionally omit them to ensure that the components needing grease are properly disassembled, cleaned, lubricated, and reassembled per their specifications. Total disassembly of the components is a more time-consuming process, but it's also the best way to ensure that all of the components are in good condition.

FIGURE 47—A Grease Fitting on the Swing-Arm Assembly (Image courtesy of Yamaha Motor Corporation, U.S.A.)

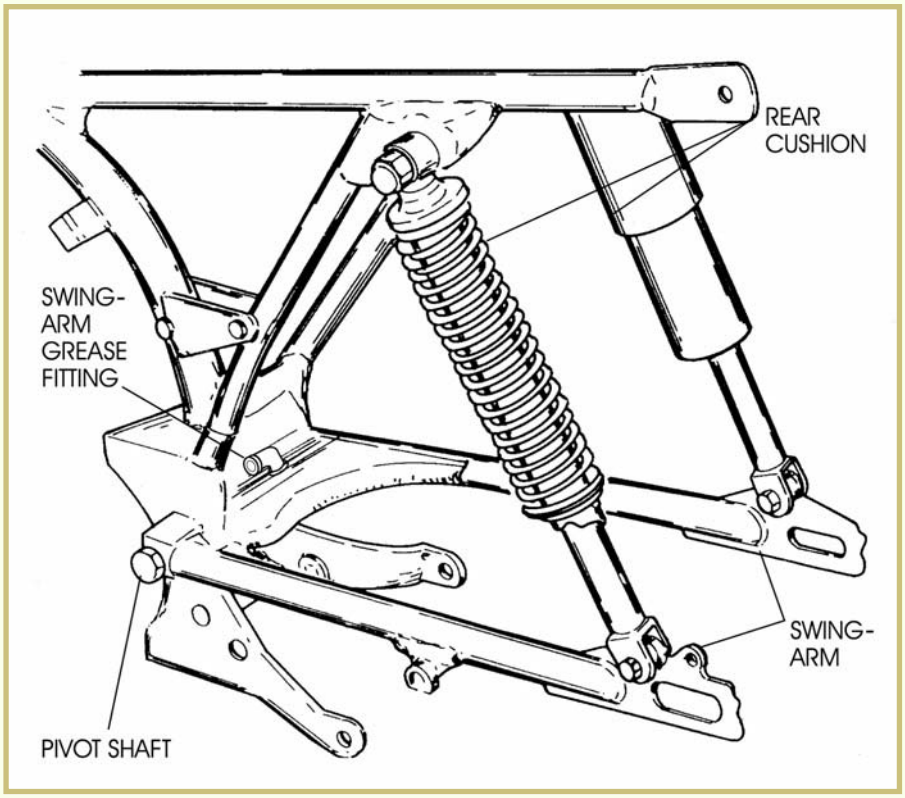

Road Test 4

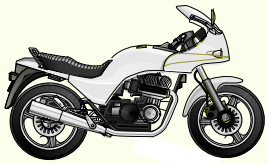

1. If you can lift a drive chain so that _____ of a sprocket tooth shows below the chain, the chain should be replaced.

2. The most popular location to find grease fittings on a motorcycle or ATV is in the area of the _____.

3. Belt-driven final-drive systems use a _____ that has teeth molded into it that mesh with a pair of toothed pulleys.

4. When properly maintained, a _____ final-drive system will probably last longer than the machine that it's used on.

5. The service procedures for clutch-cable and throttle-cable maintenance consist of verifying that the cables have the specified amount of _____, and ensuring that they're properly lubricated.

6. Before you can check the steering-head bearings on a motorcycle, you must first ensure that the _____ is off the ground.

Check your answers with those on page 51.

MOTORCYCLE AND ATV STORAGE PROCEDURES

When preparing to store a motorcycle or ATV for an extended period of time, you should take certain steps to reduce the chances of having storage-related problems. If the motorcycle or ATV to be stored needs any repairs, the repairs should be completed before the vehicle is stored, so that you don't forget what needs to be done or tie up the vehicle for repairs at the start of the next riding season.

Preparing a Motorcycle or ATV for Storage

To prepare a motorcycle or ATV for storage, you should do the following:

1. Change the engine oil and filter.
2. If the motorcycle or ATV engine is liquid-cooled, be sure that the cooling system is filled with a 50 percent antifreeze solution to prevent the cooling-system components from freezing.
3. Fill the fuel tank with fuel and add a fuel stabilizer. The fuel stabilizer will prevent the fuel tank from rusting, and prevent the fuel from deteriorating during storage. Also, turn off the fuel petcock while you're servicing the fuel system. This will prevent fuel seepage during storage.
4. Drain the carburetors. To verify that all of the fuel is out of the carburetor float bowls, start the engine (choke in the On position) after the bowls have been drained. The engine will run for a brief interval while any remaining fuel is consumed.
5. To prevent rusting in the cylinders, you need to remove the spark plugs from the cylinders, pour a teaspoon of clean engine oil into each cylinder, and cover the spark plug holes with a piece of cloth. Crank the engine several times to disperse the oil in the cylinders. Reinstall the spark plugs.
6. Remove the battery and verify that it's fully charged. Store the battery in an area that's protected from freezing and direct sunlight. You should put the battery on a trickle charger monthly while it's in storage to prevent the battery from discharging.
7. Wash and dry the motorcycle or ATV, then wax all of the painted surfaces. This will protect the vehicle while it's in storage, and will provide a clean, polished appearance when the vehicle is brought out of storage for the next riding season.
8. Lubricate the drive chain to prevent rust during storage.
9. Inflate the tires to the factory-recommended air pressure. If possible, store the vehicle with all of the tires off the ground and protected from direct sunlight.

10. Cover the motorcycle or ATV with a suitable cover and store it in an area that's free of excessive dampness, dust, and chemical fumes.

Removing a Motorcycle or ATV from Storage

When you remove a motorcycle or ATV from storage, you should do the following:

1. Uncover and clean the vehicle.
2. Change the engine oil if the vehicle was stored for more than 4 months.
3. Charge and reinstall the battery as appropriate.
4. Check the following pre-ride inspection items—tire pressure, fluid leaks, chain condition, cable adjustment, smooth throttle movement, brake function, gauge operation, and lights operation.
5. Start the motorcycle or ATV and ride the vehicle slowly in a safe riding area to verify that everything is operating correctly.

Maintenance Process Checklist

Many of the adjustments and repairs related to motorcycle and ATV maintenance can be completed in any order the technician chooses. However, you'll find that a standard routine, applicable to servicing every type of vehicle, will help you do the job more efficiently.

All technicians will adopt and practice a routine or system that works best for them. We suggest that you adopt a structured approach based on the list that follows. You can modify the list to match your unique requirements. The important thing is to get into a fixed routine so that your service technique isn't "hit or miss," but structured and complete.

The following list can be used for both two-stroke and four-stroke motorcycles and ATVs. Because of the differences in the engines, some steps and procedures should be skipped as appropriate.

1. Wash the vehicle.
2. Test the compression and leakdown.
3. Adjust the valves (four-stroke).
4. Recheck the compression (four-stroke).
5. Service the air cleaner.
6. Service the battery.

7. Check and clean the fuel system.
8. Lubricate and adjust the control cables.
9. Lubricate the parts at each grease fitting.
10. Adjust the chain.
11. Lubricate the chain.
12. Inspect and adjust the brakes.
13. Adjust the clutch.
14. Inspect, adjust, or replace the spark plugs.
15. Check and adjust the ignition system when applicable.
16. Start the engine to warm up the oil.
17. Change the oil and replace the oil filter.
18. Adjust the carburetor(s).
19. Inspect the tires and check for proper tire pressure.
20. Wipe any finger marks, dirt, and oil spots off of the vehicle.

Selling the Idea of Scheduled Maintenance

As we complete this study unit, there's an important point that we want to emphasize. You, as a motorcycle and ATV technician, should encourage motorcycle and ATV owners and riders to adopt a policy of routine periodic service inspections for their vehicles.

Scheduled quality maintenance is an important element in a program to ensure trouble-free operation of the vehicle, as is a complete pre-ride inspection each time the vehicle is used. In many cases, the warranty on the vehicle is valid only if proper periodic service has been performed and recorded.

Road Test 5

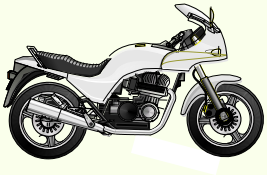

1. Why should all needed repairs be performed before storing a motorcycle or ATV for an extended period of time?

   _____

2. How can you verify that all of the fuel has been removed from the carburetors when you're preparing a vehicle for storage?

   _____

3. You should change the engine oil if the motorcycle or ATV has been stored for more than _____ months.

4. *True or False?* To prevent rusting in the cylinders, you should pour fuel into the cylinders.

5. *True or False?* To prevent cooling system freeze-ups, liquid-cooled systems should be drained before the vehicles are stored for the winter.

Check your answers with those on page 52.

Road Test Answers

1

1. False
2. hours or number of races
3. False
4. Every four races or approximately 7.5 hours
5. Every 4,000, 12,000, and 20,000 miles

2

1. hydrometer
2. Leakdown
3. False
4. bridged gap
5. False
6. ignitions
7. drag
8. slips
9. True
10. False
11. maintenance-free

3

1. charcoal canister
2. Carbon dioxide and H.O
3. True
4. air box
5. Unburned or raw fuel
6. Fuel that hasn't completely burned during the combustion process. Carbon monoxide is a colorless, odorless, poisonous, and deadly gas.
7. False

4

1. ⅓
2. swing arm
3. Gilmer-type belt
4. shaft-driven
5. play
6. front wheel

5

1. You could forget that the repairs are needed. Also, delaying the repairs will probably tie up the vehicle at the start of the next riding season.
2. Start and run the engine after draining the carburetors.
3. four
4. False
5. False

THOMSON
EDUCATION DIRECT
925 Oak Street
Scranton, Pennsylvania 18515-0001

Motorcycle Maintenance

EXAMINATION NUMBER:

03301801

Whichever method you use in submitting your exam answers to the school, you must use the number above.

For the quickest test results, go to http://www.takeexamsonline.com

When you feel confident that you have mastered the material in this study unit, complete the following examination. Then *submit only your answers to the school* for grading, using one of the examination answer options described in your "Test Materials" envelope. Send your answers for this examination as soon as you complete it. *Do not wait until another examination is ready.*

Questions 1–20: Select the one best answer to each question.

1. If you should accidentally spill battery acid, what should you use to neutralize it?

   A. A nonflammable household cleaner
   B. Water
   C. Water and baking soda
   D. Baking soda

2. Which type of air filter is most commonly used on motorcycles and ATVs?

   A. The foam air filter
   B. The gauze-type air filter
   C. The oil bath-type air filter
   D. The paper-type air filter

3. Motorcycle and ATV manufacturers recommend that their machines be

   A. serviced at specific mileage or time intervals.
   B. serviced every 4 months.
   C. serviced when they no longer run properly.
   D. tuned-up at least once a year.

4. After you adjust the valves on a four-stroke motorcycle or ATV, you should

A. check the valve timing.
B. start the engine and check the oil pressure.
C. perform a compression test.
D. check the ignition settings.

5. For every gallon of fuel burned in a motorcycle or ATV engine, approximately how much water is produced?

A. ½ gallon
B. 1 gallon
C. 1½ gallons
D. 2 gallons

6. What fluid is used to replenish a low battery?

A. Tap water
B. Sulfuric acid
C. Baking soda
D. Distilled water

7. A paper air filter is cleaned by

A. washing it in soap and water and letting it drip-dry.
B. using a nonflammable cleaning solution.
C. using compressed air.
D. spraying on a cleaner provided by the manufacturer of the filter.

8. When preparing a motorcycle for storage, you should

A. drain the oil and leave the drain plug open.
B. drain the fuel from the tank.
C. leave open the fuel line petcock.
D. start the engine after all of the fuel has been drained from the carburetors.

9. What should you check first if the steering operation isn't smooth, or if there are snags or a tight, heavy feel as you turn the handlebars on a motorcycle or ATV?

A. Faulty ball bearings
B. Interference from the cables or wire harness
C. Faulty roller bearings
D. Properly lubricated bushings

10. The four-stroke valve adjuster system that requires little or no maintenance is the

A. hydraulic valve adjuster arrangement.
B. shim-over-bucket arrangement.
C. shim-under-bucket arrangement.
D. screw-and-locknut arrangement.

11. To ensure that the carburetor synchronization adjustment is stable, you should

A. adjust the idle to 1,200 rpms.
B. lock the synchronization screws down correctly.
C. snap the throttle control grip a couple of times.
D. synchronize the carburetors after adjusting the valves.

12. Where is the most common location for the oil drain plug on a two-stroke engine transmission and clutch?

A. On the bottom of the transmission housing
B. On the clutch cover
C. Near the water pump
D. Next to the magneto

13. What is used to test a cooling system for the correct mixture of coolant and water?

A. Barometer
B. Hydrometer
C. Manometer
D. Thermometer

14. When performing a compression test, which of the following readings would be considered sufficient?

A. Below 75 psi
B. Above 12.5 psi
C. Above 100 psi
D. Above 125 psi

15. If a hydraulic brake lever or brake pedal feels soft or spongy when operated, the system most likely has

A. dirty fluid in it.
B. water in it.
C. air in it.
D. rust in it.

16. The final-drive system that requires the least amount of maintenance is the

A. shaft-driven final drive.
B. belt-driven final drive.
C. chain-driven final drive.
D. gear-driven final drive.

17. The four-stroke valve adjuster system that requires camshaft removal to make valve clearance adjustments is the

A. screw and locknut.
B. shim-under-bucket.
C. shim-over-bucket.
D. hydraulic tappet.

18. Which reading represents the specific gravity of the electrolyte in a fully charged battery?

A. 12.80 to 13.20
B. 1.280 to 1.320
C. 0.1280 to 0.1320
D. 1.280 to 13.20

19. What is the maintenance interval for spark plug replacement on a four-stroke ATV?

A. After every 10 rides
B. No interval—replace to correct problems
C. Every 3 months
D. Every 12 months

20. When used, an exhaust-emission control system directs fresh air into the exhaust port whenever there's a negative pressure in the

A. carburetor venturi.
B. intake-port area.
C. exhaust-port area.
D. combustion chamber.