Study Unit

Motorcycle Troubleshooting

By

Ed Abdo

About the Author

Edward Abdo has been actively involved in the motorcycle and ATV industry for more than 25 years. He received factory training from Honda, Kawasaki, Suzuki, and Yamaha training schools. He has worked as a motorcycle technician, service manager, and Service/Parts department director.

After being a chief instructor for several years, Ed is now the Curriculum Development Manager for the Motorcycle Mechanics Institute in Phoenix, Arizona. He is also a contract instructor and administrator for American Honda's Motorcycle Service Education Department.

Preview

In this study unit, you'll learn the art of diagnostics, which is essential to the troubleshooting process. Because it's impossible to cover every type of motorcycle or ATV problem, we'll introduce basic diagnostic and troubleshooting techniques and concepts that you can apply to many different situations. Each major topic in this study unit includes a reference table that you can use as a guide when troubleshooting motorcycle or ATV problems. To get the most from this study unit, focus your attention on the concepts presented. Learning these concepts will allow you to build a solid foundation for developing your own troubleshooting expertise.

When you complete this study unit, you'll be able to

- Systematically approach motorcycle and ATV problems
- Troubleshoot engine problems
- Troubleshoot lower-end and exhaust-system problems
- Troubleshoot carburetor problems
- Troubleshoot ignition-system problems
- Troubleshoot electrical-system problems
- Troubleshoot chassis problems
- Troubleshoot hydraulic- and mechanical-brake problems
- Troubleshoot DC circuit-system problems

Contents

Motorcycle Troubleshooting

INTRODUCTION

The ability to quickly and correctly troubleshoot motorcycle or ATV problems is the first sign of a competent technician. Proper diagnosis of a malfunction makes motorcycle or ATV disassembly, repair, and reassembly relatively simple. If a malfunction has been improperly diagnosed, the repair process can become long and tedious, or even impossible. In order to be a successful technician, you must possess proficient troubleshooting skills. First and foremost, troubleshooting begins with a thorough knowledge of the

- Parts of a motorcycle
- Job each part performs
- Effect each part has on overall motorcycle operation
- Types of failure symptoms that a bad part will cause

Once you've gained this knowledge, troubleshooting becomes a systematic and controlled approach to solving a problem.

When troubleshooting, you'll need to

- Gather all available information about the machine's malfunction
- Analyze the symptoms related to the problem
- Pinpoint the most likely cause of the problem

The repair process doesn't begin until after you've gotten a clear picture of what's causing the problem. To achieve this picture, you'll have to

- Mentally divide the motorcycle into sections (carburetion, engine, electrical, and chassis)
- Picture each component of every section
- Picture each component and its relationship to the other components and decide if each part is functioning properly

For example, suppose a spark plug isn't firing correctly. You must envision the operation of the spark plug in relation to the other motorcycle systems. After doing this, you'll have a variety of possible problems identified, besides the obvious conclusion that the spark plug is bad. The problem could be due to a dirty air filter that's creating an excessively rich fuel mixture. The source of the problem could also be the ignition circuit or the carburetor system.

It's imperative that you understand what you're trying to repair before disassembling a machine. Once you begin the disassembly process, the troubleshooting process is over. In our example, cleaning and replacing parts in the carburetor won't solve the problem if the cause is a faulty ignition. Therefore, ensure that you've truly isolated the problem before beginning any repair.

SYSTEMATIC APPROACHES TO SOLVING PROBLEMS

This section of the study unit concentrates on techniques that expedite the process of troubleshooting motorcycle and ATV problems. Developing a systematic approach to problem solving now will help you to perfect your skills as you gain experience.

Types of Problems

A *symptom* is an indication of an abnormal condition that you can recognize and identify. An example of a symptom would be a motorcycle that's making a ticking sound when it's idling. The symptom helps you determine the cause of the problem. The following paragraphs cover three types of failures that you may encounter.

Constant Failures

A *constant failure* occurs when a symptom is always present. For instance, a motorcycle is functioning properly and without warning, the engine fails and the rear wheel locks up. The locked rear wheel is considered a constant failure.

Intermittent Failures

An *intermittent failure* isn't always present. This type of failure increases the difficulty of the troubleshooting process. For example, a particular motorcycle functions properly with the exception of occasionally blowing a fuse when the vehicle hits a pothole. The rider replaces the fuse and rides trouble-free until the problem recurs when another large bump is encountered. Chances are, this intermittent problem is caused by multiple factors. In this instance especially, a systematic approach to troubleshooting the problem is required. With any problem (performance, electrical, mechanical, or fuel), a systematic approach allows the problem to be diagnosed in a reasonable amount of time with a high degree of accuracy.

Improper-service Failures

An *improper-service failure*, as the name implies, is caused by a technician who made a mistake during the servicing of the equipment. Suppose a customer brings an off-road vehicle to your service department for a new set of tires and the technician servicing the vehicle fails to properly torque one of the wheel-retaining nuts and forgets to install a cotter pin on the rear-axle nut. Later this improper service causes the wheel to wobble and fall off while the customer is riding the machine. Obviously, most failures caused by improper service aren't this dramatic. It's important not to overlook problems resulting from bad service when you're troubleshooting a vehicle.

Beginning the Troubleshooting Process

The proper method of diagnostic troubleshooting consists of four steps that must be followed in the proper sequence. Follow these steps for a foolproof approach to the troubleshooting and repair process.

1. Verify the problem.
2. Isolate the problem.
3. Repair the problem.
4. Verify the repair.

When troubleshooting, you must observe the failure and verify that all of the information you've received is accurate and guides you to the trouble area. After you've completed the verification stage, you're ready to begin the isolation phase.

Isolating a problem begins with the easiest and most obvious solution to the problem. As the simplest solutions fail to correct the problem, progression to more involved and difficult checks needs to be performed in a step-by-step manner. The most common diagnostic mistake is to overlook the obvious or easiest possible cause of a failure. For example, a motorcycle was functioning properly, then stalled and wouldn't restart. The owner took the motorcycle to a service station. The technician removed and checked the spark plugs, checked the air filter, replaced the battery, and performed compression and leakdown tests. When all was said and done, the problem was an empty fuel tank. Believe it or not, this situation isn't uncommon and results from poor troubleshooting skills (not starting with the simplest solutions first).

The symptoms of a problem guide you to the specific system you should troubleshoot, provided you have an understanding of how each system works and what it's responsible for. For example,

- If the battery won't turn the engine over, you can assume that the machine has a worn-out battery or a charging system that's failing to provide a proper charge to the battery.
- If gasoline is leaking from the carburetor overflow tube, you can assume that there's an internal carburetor problem that's causing excessive amounts of gasoline to enter the system.

As the severity of problems increases, the knowledge required to repair the problem increases. An example of this is poor engine performance. A performance problem could be caused by an ignition-system failure, a mechanical engine problem, or even a fuel-related problem. It's imperative to use all available resources and any information you can gather from your customer to assist you in identifying which system is responsible for the problem.

After you've isolated the problem, you must repair the problem. In order to repair the problem, you must refer to the specific service manual for the particular motorcycle or ATV you're servicing. When you complete the repair, you must verify the repair. If you can't verify that the repair was successful (the problem still occurs), you must repeat the troubleshooting process, beginning with the verification stage.

Troubleshooting Guides

The appropriate manufacturer's service manual contains checklists or tables of possible operating troubles and their probable causes. These tables aid in troubleshooting and problem solving. All possibilities should be carefully checked because multiple factors may be causing the overall problem. Throughout this study unit, examples of typical problems and possible solutions are provided. These examples have been derived from current service manuals and technical guides. However, you should note that the specific troubleshooting sections of this study unit and in manufacturer's service manuals are intended only as a guide to diagnosing problems. Always read the detailed information in the specific chapters of the appropriate service manual before performing service work on any system or major component. Remember to adhere to all cautions and warnings.

As you learn more about various motorcycle and ATV systems, you may develop a tendency to troubleshoot problems based on your personal experience. This approach is a gamble that can occasionally save you time; but if you guess wrong, it costs you time and money. Don't be afraid to apply your experience to a good troubleshooting routine, but don't underestimate repairs because the failure looks familiar.

Locating and fixing a problem is very rewarding, provided you use good troubleshooting techniques. Furthermore, the more difficult the problem, the greater the reward when you've solved it. To be successful, the most important barrier to overcome is the lack of self-confidence required to perform the job. Here are some things to keep in mind when you're troubleshooting a problem.

- Always think the problem through.
- Never overlook the obvious.
- Never assume anything.
- Never take shortcuts.
- Never make more than one change or adjustment at a time.
- Always use the appropriate service manual(s) for all removals, replacements, and adjustments.
- Remember to always *verify* the problem, *isolate* the problem, *repair* the problem, and most importantly, *verify* the repair.

Road Test 1

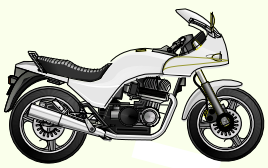

At the end of each section of *Motorcycle Troubleshooting*, you'll be asked to check your understanding of what you've just read by completing a "Road Test." Writing the answers to these questions will help you review what you've learned so far. Please complete *Road Test 1* now.

1. Another word used to define a description of a problem is _____.

2. Where would you find a checklist or table of possible operating troubles and their probable causes?

   _____

3. What are the four procedures that must be followed when developing the proper method of diagnostic troubleshooting?

   _____

   _____

4. What are the three basic categories of troubleshooting problems on motorcycles and ATVs?

   _____

5. What one barrier must be overcome before you can troubleshoot any type of problem?

   _____

Check your answers with those on page 53.

TROUBLESHOOTING A MOTORCYCLE OR ATV THAT WON'T START

A large number of problems can be responsible for a motorcycle or ATV that won't start. Frequently, only one of these potential problems occurs at a time, and correcting that problem allows the motorcycle or ATV to start and function properly. As mentioned, locating the problem can be a simple job if certain procedures are followed.

The first step in troubleshooting a motorcycle or ATV that won't start is attempting to start the engine. As you attempt to rotate the engine using the kick starter or electric starter, observe the following:

- If the engine doesn't rotate
- If the engine makes unusual noises
- If engine compression is inadequate

If any of the above conditions exist, the problem is internal and requires engine repair. If the engine fails to rotate when in neutral, the engine has seized and the problem lies within either the crankshaft, connecting rod, or piston. Repair of these parts was previously discussed in the engine top-end and lower-end study units.

Engine rotation. When checking to see if the engine is rotating freely, you should also check the clutch. If the clutch is slipping badly, the engine may appear to rotate when in reality it has seized. If you suspect the clutch is the source of the problem, refer to your study unit discussing clutches.

Unusual engine noise. There could be a wide variety of reasons for unusual noises coming from the engine. For example, a heavy clunking sound coming from the lower end could indicate a loose connecting rod. As you gain experience with motorcycles and ATVs, recognizing certain noises and identifying causes becomes an easy task.

Compression. If the engine doesn't have proper compression (Figure 1), the problem probably lies within the pistons, rings, valves, or cylinder bore. If all lower-end parts appear to be in proper working condition, the problem must be related to combustion. Lower-end engine problems are discussed in detail as this study unit progresses.

After you've completed the preliminary checks while attempting to start the engine, think about the three essential factors for proper combustion: fuel, compression, and ignition.

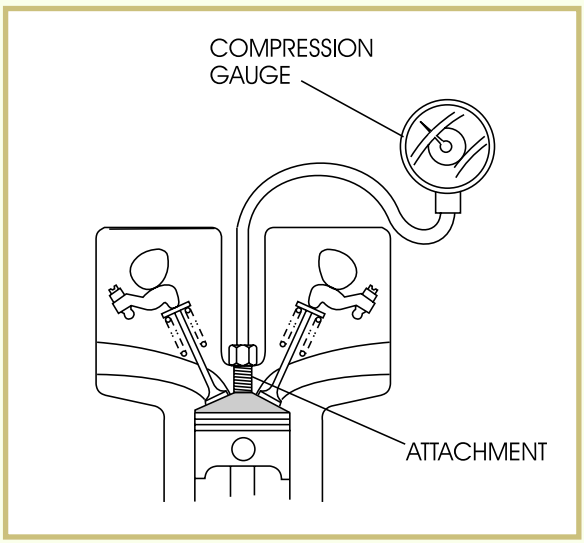

FIGURE 1—A compression check is shown here. (Copyright by American Honda Motor Co., Inc. and reprinted with permission)

Fuel

After excluding major engine trouble, proceed to inspect the fuel supply. When troubleshooting the fuel system, check the following:

- Fuel in the gas tank
- Fuel flow to the carburetor
- Fuel flow from the carburetor to the engine

A plugged gas-tank vent, fuel shut-off valve, or gas line can be responsible for restricting the fuel supply to the carburetor. Trace through the system in search for blockage. Begin with the vent, then the shut-off valve (Figure 2), and finally the gas line. If any of the components are plugged or dirty, they must be cleaned.

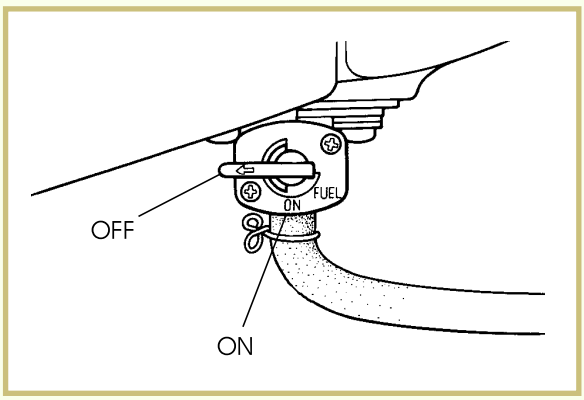

FIGURE 2—In order for fuel to flow from the fuel tank to the carburetor, the fuel shut-off valve must be in the ON position. (Image courtesy of Yamaha Motor Corporation, U.S.A.)

Restriction of the gas flow to the engine creates a lean fuel mixture and is indicated by a dry spark plug. Fuel flow from the carburetor to the engine can be interrupted by air leaks between the carburetor and inlet manifold, or in the case of two-stroke engines, bad lower-end engine seals. Inspect and repair these parts as needed.

A wet spark plug indicates a rich mixture. The supply of gas is more than the engine can burn (flooded). A rich mixture may be caused by

- A closed air choke valve (carburetor choke)
- A dirty air cleaner
- A stuck float

If the problem is caused by a rich mixture, ensure that the choke is open. Then, check the air cleaner and clean as needed. Next, check the float shut-off level in the carburetor. A stuck float doesn't shut off the gas flow to the carburetor when requested. Repairing this problem requires the float bowl to be removed and fixed. Refer to your study unit on carburetion.

Compression

The piston, rings, valves, and cylinder must form an airtight seal to compress the air-and-fuel mixture to the point where combustion occurs in the cylinder. These parts are checked using a compression gauge, as shown in Figure 1. Compression must be within factory specifications, which are provided in the appropriate service manual for the particular model you're working on.

When working on four-stroke engines, if compression is low, you should perform a leakdown test (Figure 3). A leakdown test provides a more accurate indication of the area of the engine that's causing the problem. Always refer to the appropriate service manual, as well as the study units covering the upper-end engine assembly.

Ignition

Generally, as long as there is compression and the ignition system is working correctly, the engine will start (even if it's receiving too much gas). Therefore, if compression and fuel flow are satisfactory, but the engine still fails to start, there may be a problem in the ignition system. Check the following items.

- Battery
- Fuses, connections, and switches
- Spark plugs
- Ignition system

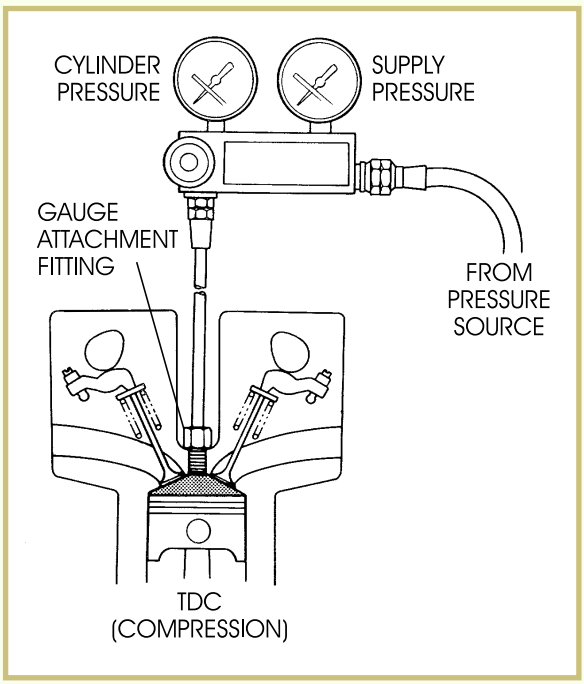

FIGURE 3—Shown here is a leakdown test being performed on a four-stroke engine. (Copyright by American Honda Motor Co., Inc. and reprinted with permission)

Check for the obvious. Ensure that all ignition-related switches are in the Run position. It isn't uncommon to find a motorcycle or ATV that won't start because an ignition switch is set to the Off position.

Check the battery. Turn on the lights. If they burn brightly, the battery is probably all right. If the lights don't operate, check the fuse and replace if needed. If the fuse is good, the problem may be a discharged battery. A quick check of the battery can be made using a voltmeter. Connect the negative voltmeter lead to the negative battery terminal. Connect the positive voltmeter lead to the positive battery terminal. Read the voltage on the meter. The voltage should be within 0.5 volts of the specified voltage. In other words, a 12-volt battery should have a minimum reading of 11.5 volts. If the battery voltage is low, the battery must be recharged. If the battery is charged and the fuse is good, but the lights still fail to operate, inspect the connections of the battery cables to the battery terminals. The connections may be corroded, preventing the flow of current. Remove the cables or wires, clean the connections with a wire brush, and reconnect the cables to the battery. If you still don't have lights, there may be an open circuit in the wires or a switch. An open circuit means that the flow of electricity has been interrupted. To check for an open circuit in the lighting system, connect a test wire to the insulated side (not the grounded side) of the battery and to the lights. The lights should now light up. If the situation allows, use a test light to test electrical circuits. A *test light* is a bulb with one wire connected to the grounded side of the bulb and another wire to the filament. When the grounded side is connected to the frame or some other metal part, and the filament lead is in contact with the motorcycle battery, the bulb will

glow because a complete circuit has been formed. Ensure that the test bulb is of the same voltage as the battery in the circuit you're testing.

Check a spark plug. If the engine still won't start after checking compression, fuel flow, and current flow to the ignition circuit, check the spark plugs. Remove a spark plug and check the gap. Ensure that the gap hasn't been fouled by carbon deposits and the plug hasn't been flooded by gas. As we mentioned before, a wet spark plug can be caused by a rich fuel mixture or by a faulty ignition. Each time the engine revolves, gas is inducted into the cylinder. If the gas isn't burned each time, it will eventually flood the spark plug. If the plugs are gas-fouled, they must be cleaned or replaced; and then the spark plug must be tested to ensure that it's firing properly. A common method of checking the plug for spark is to remove the plug from the cylinder, install the high-tension lead (wire from the coil to the plug) on the plug, and ground the metal portion of the plug to the cylinder head or engine. Then turn the engine over (be sure the ignition key is on). When the engine revolves, a sharp blue spark should jump the plug gap. No spark or a weak spark (red spark) indicates a faulty ignition system, which can be caused by multiple factors. If you don't get a sharp, blue spark when you perform this test, the spark plug itself may be bad. Repeat the procedure using a new plug. Troubleshooting faulty ignition systems is discussed in more detail as you proceed in this study unit.

Check the ignition system. If a new plug doesn't produce a sharp, blue spark, proceed to the ignition-system troubleshooting section in the electrical section of this study unit to locate the problem.

Road Test 2

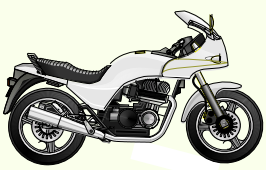

1. When a spark plug fires, the color of the spark in the electrode gap should be _____.

2. If an engine is seized (mechanically bound) when its transmission is in the neutral position, what components may be the cause of the problem?

   _____

3. If a four-stroke engine has a problem with the piston(s), rings, or valves, the engine will probably have low _____.

4. When checking for a possible ignition-system problem, what should you check first?

   _____

5. *True or False?* If a motorcycle or ATV won't start, generally there are at least three problems causing the failure.

Check your answers with those on page 53.

TROUBLESHOOTING ENGINE LOWER-END AND EXHAUST SYSTEMS

When troubleshooting a motorcycle or ATV, the problems will frequently be found in the fuel system, electrical system, upper-end assembly, or chassis. However, problems may also occur in the engine lower-end assembly. Troubleshooting the lower-end engine components follows a simple, step-by-step procedure of analyzing systems and tracing possible problems.

Troubleshooting the Lower End

You must have a thorough knowledge of all components of the lower-end assembly before you can begin troubleshooting. You must know what parts are used, understand how they work, and be aware of their relation to the entire system. After completing the primary aspects of troubleshooting, the first thing to do in checking the lower-end components (connecting rods, flywheel, bearings, and other related lower-end parts) is to turn over the engine using the kick starter or the electric starter. Compression should resist free starter movement, and there shouldn't be excessive noise from the bearings.

Crankshaft

Crankshaft-related problems generally consist of bearing or seal failure. Bearing failure is easy to diagnose because it causes only two symptoms. One is excessive noise, and the other is a frozen or seized engine. However, you mustn't forget that transmission and clutch drive problems can also cause excessive noise or make it appear that the engine has seized. If you have an engine that can't be turned over using the starter, you should disconnect the engine-to-clutch drive and attempt to revolve the engine by hand. If the engine still won't turn over, you'll know the problem lies in the engine itself and not in the transmission or clutch.

Transmission

The two most common symptoms found when diagnosing motorcycle or ATV transmission problems are

- The machine is hard to shift
- The transmission jumps out of gear

The following table provides the most common causes of these problems in the order that they're most likely to occur.

Table 1

TRANSMISSION TROUBLESHOOTING

Symptom	Problem
Hard to shift	a. Improper clutch operation b. Improper clutch adjustment c. Incorrect or contaminated transmission oil d. Bent shift forks e. Bent shift shaft f. Damaged shifting drum
Transmission jumps out of gear	a. Worn transmission-gear dogs or slots b. Bent shift-fork shaft c. Broken shifting-drum stopper spring d. Bent shift forks e. Broken shift-linkage return spring

Two-stroke Pressure Testing

In a two-stroke engine, bad crankcase seals can prevent the air-and-fuel mixture from being transferred into the combustion chamber. The correct way to check for lower-end seal failure is to use a special crankcase pressure tool. This tool is connected to the intake manifold, and air pressure is pumped into the crankcase. If the pressure you pumped into the crankcase drops rapidly, you should suspect seal failure. To check for air leaks, smear soap suds (such as dish soap) around the seal. If there's a leak, the suds will bubble. Factory specifications require that the crankcase hold a given amount of pressure for a certain period of time. Refer to your service manual for this information. If the soap test doesn't indicate leaking seals and the engine won't hold pressure, suspect a leak in the case joints or the cylinder-to-crankcase gasket. Perform the soapsuds test on these joints.

Note: The crankcase and transmission generally use a common casting, and air can leak from the engine case into the transmission case. If this is the problem, soapsuds placed around the transmission vent will bubble as air is pumped into the engine.

Two-stroke engines with more than one cylinder have a separate crankcase cavity for each piston and rod. These cavities are separated from each other by seals, which are located on the crankshaft. Although each cavity is sealed, it's possible for these seals to leak. There's no way to check for this problem using soapsuds. The problem here is that you know there's a leak somewhere, but you haven't been able to locate it. Use the following test to determine if there's a leak between the cylinders.

Plug all of the intake and exhaust ports. Pressurize the entire engine using the pressure tool. If the leak is between cylinders, filling the entire engine should cause pressure to hold as specified in the service manual. This test is important because the motorcycle owner will often want to know what the problem is and how much work is involved before you begin any repairs. By using this test you can determine if it's necessary to take the engine entirely apart in order to repair it.

Exhaust-system Troubleshooting

If you've excluded the upper-end assembly, lower-end assembly, ignition system, and carburetion system, but are still experiencing poor engine performance, you must troubleshoot the exhaust system. Ensure that the exhaust system is clear of any obstructions that would prevent the burned gases from escaping the engine. Plugged exhaust systems will restrict the airflow into and out of the cylinder. This is especially true with two-stroke engines because they have oil mixed directly with the fuel and expel the oil through the exhaust system.

Road Test 3

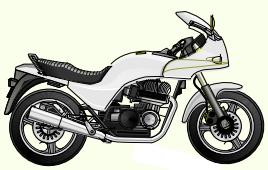

1. What symptoms are most likely to occur when an engine's crankshaft bearing fails?

   _____

2. What are the two most common symptoms found when troubleshooting a transmission problem?

   _____

3. *True or False?* In a multicylinder two-stroke engine, the cylinders are separated from each other by seals located on the crankshaft.

4. What common exhaust problem (especially on a two-stroke engine) causes the engine to perform poorly?

   _____

5. What is the proper way to check for bad crankcase seals in a two-stroke engine?

   _____

   _____

Check your answers with those on page 53.

TROUBLESHOOTING CARBURETOR PROBLEMS

Carburetor troubleshooting is one of the most common motorcycle and ATV repair jobs. Carburetor troubleshooting can be a simple, straightforward, rewarding procedure, or a tedious, complicated, unrewarding chore. The difference between these two extremes lies within your approach to problem solving. You can randomly disassemble and replace components, or you can take a systematic, step-by-step approach.

Is It Rich or Lean?

Usually, carburetor problems are based on an improper fuel-and-air mixture that's either too rich or too lean. Observe the engine exhaust and check the condition of the spark plug to determine whether the mixture is too rich or too lean. Always keep in mind that a rich or lean mixture can have more than one cause. A rich mixture can be caused by too much fuel or not enough air. A lean mixture can be caused by too much air or not enough fuel.

After a carburetor has been classified as too rich or too lean, the next step is to determine which throttle position is causing the malfunction. The following paragraphs provide some common symptoms of an excessively rich or lean carburetor situation.

Common Symptoms of a Rich Carburetor Mixture

Engine runs rough and/or misses. If this occurs in a two-stroke engine, it's known as "four-stroking." This problem results from occasional, incomplete combustion inside the engine.

Excessive exhaust smoke. In a two-stroke engine, this is sometimes difficult to determine because exhaust smoke is common in most two-stroke motorcycles, and most visible two-stroke exhaust is oil. In a four-stroke engine, the smoke will be black in color.

Engine performance decreases as it warms up. The air-and-fuel mixture must be rich when the engine is cold. As the engine warms, the rich mixture is no longer needed. An engine with a rich mixture will cause the engine to run poorly as it reaches normal operating temperature.

Spark plugs are fouled black with carbon deposits. Carbon deposits are relatively dry and free of oil, as well as being soft and easily removed. Don't confuse this with excess oil. If the dark deposit on the plug is wet and oily, it isn't primarily carbon.

Removing the air filter improves engine performance. Even if the air filter is clean, it restricts airflow to the engine. Eliminating this

restriction allows more air into the engine. If the fuel-and-air mixture is too rich, removing the air filter will make the engine run better.

Common Symptoms of a Lean Carburetor Mixture

Engine overheats. This is difficult to verify from external evidence. Severe detonation can be present and isn't always heard when it occurs. Engines with a chrome exhaust system will show signs of recent severe bluing near the exhaust port. If the bluing appears to be getting worse, the engine is probably running too hot.

Activating the choke improves engine performance. This simply richens the mixture and is only a temporary cure to the problem.

Spark plugs have a burned white appearance. If spark plugs are used in a lean-mixture condition for an extended period of time, the electrodes of the spark plugs will be burned away.

Engine speed fluctuates. It's not uncommon for a lean-fuel mixture to cause an engine to fluctuate or surge even though the throttle is at a constant position.

Engine noticeably lacks power. Compare the power of a particular engine to what it should have. Low power can be dangerous, as the risk of engine seizure is greatly increased with an overheating engine. A considerable difference in power can be a result of a lean carburetor.

When Is the Problem Apparent?

After determining whether the mixture is too rich or too lean, you must determine in which throttle position the problem occurs to know which circuit needs repair. Before starting to work on the carburetor, you should always check out some of the external items that can affect carburetion. If the mixture appears rich, check the air filter and the cable to the carburetor choke. If the air cleaner is excessively dirty, the air will have difficulty getting to the engine. If the choke cable is too tight, the choke will be allowing extra fuel into the venturi or cutting off the air supply, depending on the cold-starting device used on the carburetor. If the mixture is too lean, ensure that the fuel is flowing properly from the fuel tank. Also, inspect the intake manifold for air leaks.

If everything on the external side of the engine is in proper working order, the carburetor will most likely need repairing. The following tables are divided into throttle ranges and provide common causes of rich and lean mixtures. Also included are common repairs for each situation, as well as suggestions to follow if none of the common problems are present.

Table 2

CARBURETOR TROUBLESHOOTING

0 — 1/4 THROTTLE OPENING

Too Rich		Too Lean	
Problem	**Remedy**	**Problem**	**Remedy**
Choke activated	Verify that the choke is in the Off position	Carburetor mounted loosely	Tighten carburetor
Pilot air passage blocked	Blow out passage area with compressed air	Pilot jet plugged	Clean jet with compressed air
Pilot jet loose	Tighten jet	Pilot outlet or bypass ports clogged	Clean with compressed air
Pilot jet air bleed blocked	Clean jet with compressed air	Fuel level too low	Adjust level as per service manual
Fuel level too high	Adjust level as per service manual		
Lean the mixture by turning the adjustment screw ¼ to ½ turn. (Check service manual to determine if adjustment is CCW or CW)		Richen the mixture by turning the adjustment screw ¼ to ½ turn. (Check service manual to determine if adjustment is CCW or CW)	

Table 3

CARBURETOR TROUBLESHOOTING

1/4 — 1/2 THROTTLE OPENING

Too Rich		Too Lean	
Problem	**Remedy**	**Problem**	**Remedy**
Pilot jet loose	Tighten	Needle jet blocked	Clean with compressed air
Pilot air passage obstructed	Clean with compressed air	Pilot outlet or bypass ports clogged	Clean with compressed air
Primary air passage blocked	Clean with compressed air	Main jet clogged	Clean with compressed air
Needle jet/jet needle worn	Replace	Fuel level too low	Adjust as needed
Main jet loose	Tighten		
Fuel level too high	Adjust as needed		
Air filter excessively dirty	Clean or replace		
If none of the above appear to help the problem, try fitting a slide with a larger cutaway.		If none of the above appear to help the problem, try fitting a slide with a smaller cutaway.	

Table 4

CARBURETOR TROUBLESHOOTING

1/2 — 3/4 THROTTLE OPENING

Too Rich		Too Lean	
Problem	**Remedy**	**Problem**	**Remedy**
Needle jet/jet needle worn	Replace	Main jet clogged	Clean with compressed air
Main jet loose	Tighten	Needle jet blocked	Clean with compressed air
Primary air passage blocked	Clean with compressed air	Fuel level too low	Adjust
Fuel level too high	Adjust		
Air filter excessively dirty	Clean or replace		
If none of the above appear to help the problem, lower the needle one position.		If none of the above appear to help the problem, raise the needle one position.	

Table 5

CARBURETOR TROUBLESHOOTING

3/4 — FULL THROTTLE OPENING

Too Rich		Too Lean	
Problem	**Remedy**	**Problem**	**Remedy**
Main jet loose	Tighten	Main jet clogged	Clean
Needle jet/jet needle worn	Replace	Needle jet clogged	Clean
Air filter clogged	Clean or replace	Fuel level low	Adjust
Fuel level too high	Adjust		
If none of the above appear to help the problem, install a smaller main jet.		If none of the above appear to help the problem, install a larger main jet.	

Other Carburetor-related Problems

Aside from the carburetor problems previously discussed, other common problems will appear from time to time. The most common of these problems is water in the float bowl. Water is heavier than gasoline and will penetrate the circuits of the carburetor and eventually reach the engine. When this occurs, the engine runs rough or not at all. Draining the float bowl cures the symptom; but ultimately, the cause needs to be corrected.

Water in the system. Often washing a motorcycle or ATV with a high-pressure hose causes water to penetrate the sealing area between the air filter and carburetor or the seal of the gas cap. If water penetrates either area, it eventually enters the carburetor and causes problems. Carelessness when washing a motorcycle or ATV causes this to become a recurring problem.

Clogged fuel-tank vent. Another widespread and potentially baffling problem is a clogged fuel-tank vent. Normally, air enters the tank through the vent and replaces the space left by the fuel as it's burned. If the vent is clogged, a vacuum is created in the fuel tank and can restrict the flow of fuel. This restriction can sometimes be enough to cause the engine to stall. Given this scenario, the rider opens the fuel cap to ensure that there's gas in the tank. Opening the fuel tank destroys the vacuum, the rider sees fuel, and starts the motorcycle or ATV. The machine functions properly for a few more miles until the vacuum is re-created and the fuel flow is slowed or stopped. In addition, a clogged fuel-tank vent can cause a carburetor-flooding condition. If the fuel tank is exposed to intense heat, such as the hot sun, gasoline vapors will expand. If the fuel vent is plugged, the vapors create pressure inside the tank. This pressure can force gasoline past the carburetor float valve into the float bowl and into the engine. This type of problem is rare and isn't usually anticipated.

When confronted with a baffling carburetion problem, exercising common sense is the only way to rectify the problem. Follow these basic tips when you've reached an impasse.

- Remove yourself from the situation and consider the total process of carburetion.
- Thoroughly think out all options before doing anything drastic.
- Implement one change at a time; multiple adjustments made simultaneously amplify the problem.

Carburetor Operation Summary

A complete understanding of how the carburetor on a motorcycle or ATV functions is critical to the troubleshooting process. The following paragraphs provide a basic summary of the internal workings of a carburetor. For a detailed description of carburetion operation, refer to the study unit on fuel systems.

The fuel petcock allows the fuel to flow past the float valve and into the float bowl (Figure 4). The level of fuel rises in the float bowl and lifts the float, which, in turn, operates the float valve. When the correct fuel level is reached, the float causes the float valve to contact the valve seat and stop the flow of fuel. If the choke valve or enrichment valve (Figure 5) is turned on, the incoming air supply is restricted. This allows a rich mixture to enter the carburetor. When the engine is turned over, air and fuel are drawn into the carburetor venturi. The air and fuel are mixed with the pilot (or slow) system. Slow-system air and fuel enter through passages in the carburetor body and are metered by the pilot mixture screw. Fuel is drawn up from the float bowl through the low-speed jet. Air-bleed holes in the jet allow the fuel to be atomized slightly as it's mixed with the

incoming air. The mixture is then drawn into the venturi through the bypass and outlet ports in the circuit.

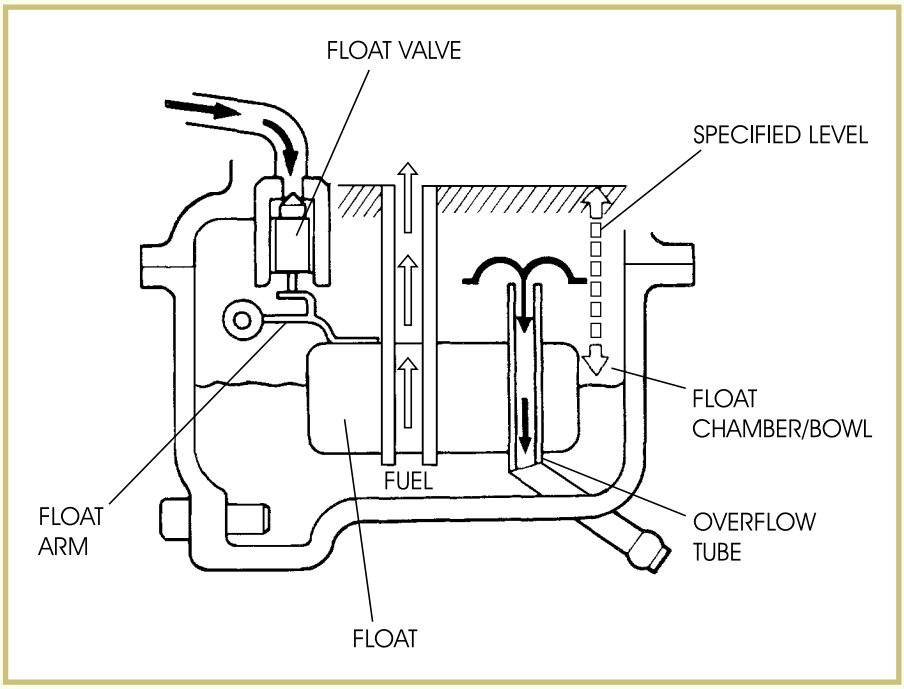

FIGURE 4—A Typical Float Chamber (Copyright by American Honda Motor Co., Inc. and reprinted with permission)

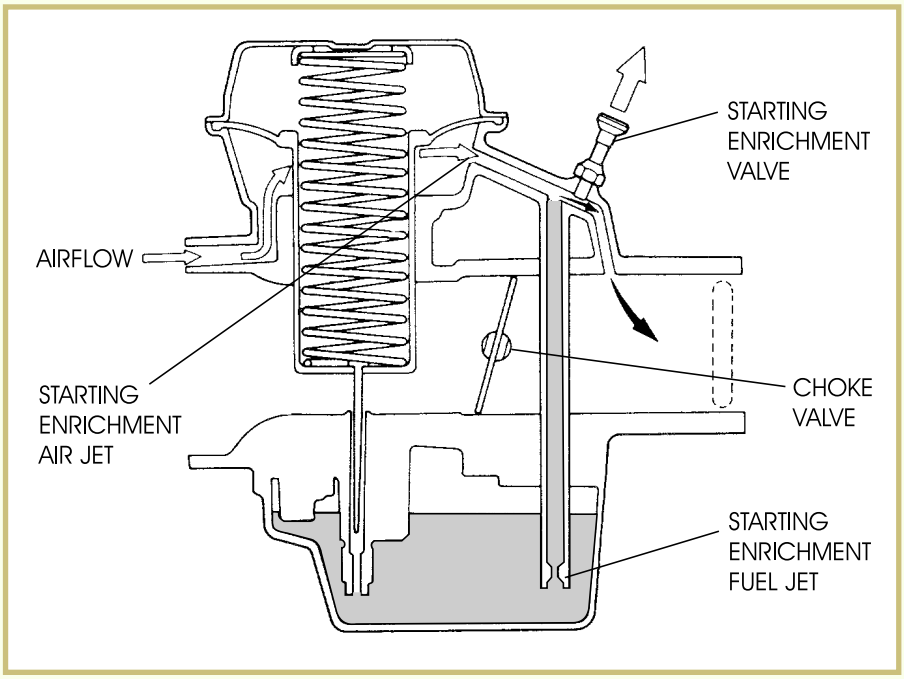

FIGURE 5—The choke and enrichment valves control the flow of fuel to the engine. (Copyright by American Honda Motor Co., Inc. and reprinted with permission)

After the engine warms up and is idling on the pilot system, the choke system is no longer required. When the rider applies more throttle, the carburetor throttle slide begins to lift, allowing more air flow under the slide. At about ¼ throttle, the first tapered section of the jet needle arrives at the top of the needle jet, and fuel begins to flow out of the clearance between the needle jet and the needle (Figure 6). This clearance increases as the slide is lifted, up to about ½ throttle. At ½ throttle, the second needle-jet taper section begins to take effect. This second taper changes the rate at which fuel flows into the engine, allowing an accelerated fuel flow into the venturi. Fuel for the main system is drawn up from the float bowl through the main jet and the needle jet. As the fuel exits the needle jet, it's mixed with air that's metered by an air jet in the primary air passage. The fuel and primary air are mixed, aiding in the atomization process; the mixture is then drawn into the venturi. At about ¾ throttle, the clearance between the needle jet and the needle is so large that the main jet meters the fuel as it enters the carburetor.

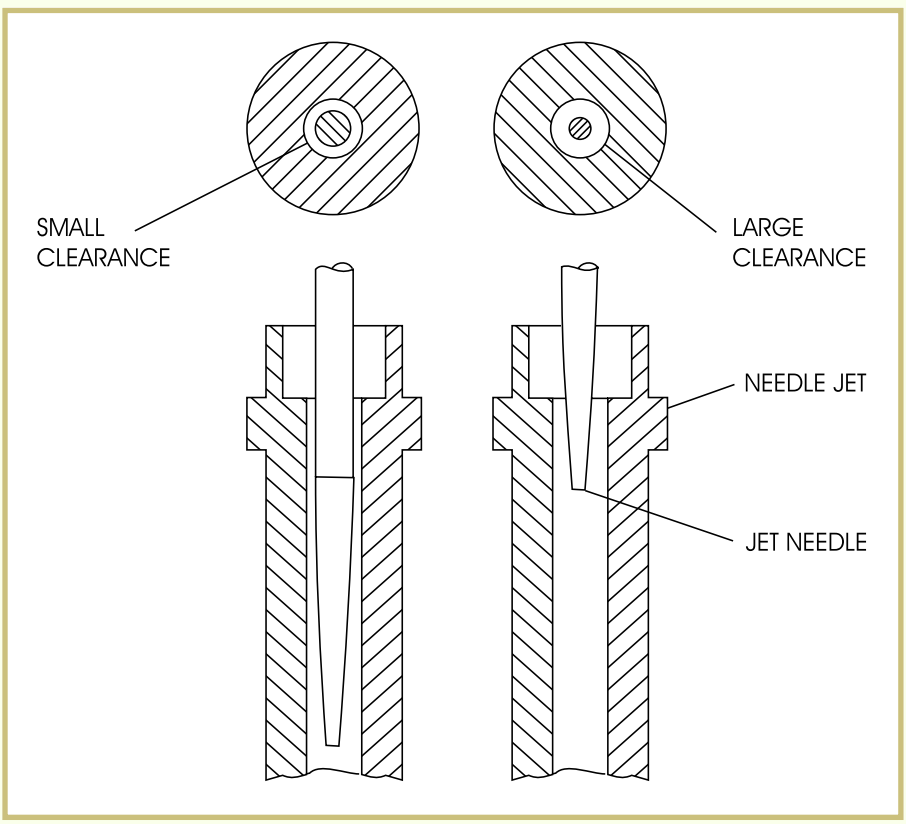

FIGURE 6—The jet needle lets more fuel into the carburetor venturi as it rises in the slide. (Copyright by American Honda Motor Co., Inc. and reprinted with permission)

Maintenance procedures such as setting the idle speed, synchronizing multiple carburetors, and adjusting cable free play are explained in detail in the individual service manuals. Specifications for the jet needle, air-and-fuel mixture screw, and float level are also found in the service manuals. The settings contained in these manuals are standard recommendations. Some modifications may be necessary to accommodate specific conditions or riding habits.

Troubleshooting Suggestions

The following table (Table 5) provides common carburetor symptoms and problems. Use the table as a general guide to diagnosing problems, using a systematic approach. Always read the appropriate chapters of the specific service manual before performing any maintenance, and strictly adhere to all warnings and cautions. You'll have much better success when troubleshooting a carburetor if you use the following guidelines instead of personal experience or your neighbor's advice.

Table 6

CARBURETOR TROUBLESHOOTING

CARBURETOR-RELATED PROBLEMS

Symptom	Problem
Engine won't start	• No fuel to carburetor • Too much fuel to the engine • Intake air leak • Fuel contaminated or deteriorated • Pilot (or slow) circuit clogged
Lean mixture	• Pilot jet clogged • Float level too low • Fuel line partially restricted • Carburetor air vent not operational • Intake-manifold air leak • Fuel pump not working properly • Vacuum piston faulty (CV carburetor)
Rich mixture	• Choke valve left in the On position • Float valve leaking • Float level too high • Carburetor air jets clogged • Air filter element excessively dirty
Hesitation during acceleration	• Accelerator pump malfunction

(Continued)

Table 6—Continued

CARBURETOR TROUBLESHOOTING

CARBURETOR-RELATED PROBLEMS	
Symptom	**Problem**
Engine stalls, hard to start, rough idling	• Fuel line restricted • Ignition-system malfunction • Fuel mixture incorrect • Fuel contaminated/deteriorated • Intake-manifold air leak • Idle speed not properly adjusted • Fuel pump not operating correctly • Low-speed mixture screw misadjusted • Pilot-circuit or starting-enrichment valve circuit clogged • Float level incorrect • Fuel tank breather clogged • Evaporative-emission carburetor air-vent control valve faulty • Evaporative-emission purge-control valve faulty
Backfiring or misfiring during deceleration	• Air-cutoff valve inoperable • Lean mixture in pilot circuit • Secondary air-supply system faulty • Hose of emission-control system faulty
Backfiring or misfiring during acceleration	• Ignition system faulty • Fuel mixture too lean
Poor driveability and poor fuel economy	• Fuel system clogged • Ignition malfunction • Faulty evaporative-emission carburetor air-vent control valve • Damaged/misconnected emission-control system hose

Road Test 4

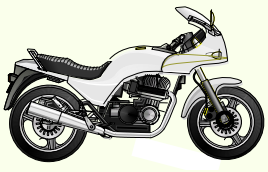

1. When a two-stroke engine is functioning poorly and misfiring, this condition is referred to as _____.

2. If you turn on the choke and the engine runs better, this generally indicates a _____ carburetor mixture problem.

3. _____ is a common contaminant that penetrates the float bowl and causes the engine to run rough or not at all.

4. If you've determined that a carburetor has an excessively rich mixture, what should you check first?

   _____

5. If the engine runs worse as it warms up, this generally indicates a _____ carburetor mixture problem.

6. *True or False?* A clogged fuel tank vent can cause a carburetor flooding condition.

7. *True or False?* A carburetor with a float-level adjustment that's too high will have a lean mixture.

8. A motorcycle or ATV that backfires or misfires during deceleration most likely has a _____ mixture condition in the pilot circuit.

9. If the spark plugs are fouled black with carbon deposits, you should look for a _____ carburetor mixture problem.

Check your answers with those on page 53.

TROUBLESHOOTING ELECTRICAL PROBLEMS

Of all problems that come into a motorcycle or ATV service department, electrical-system problems are usually considered the most difficult to troubleshoot and repair. One of the reasons for this is that many technicians don't fully understand electrical systems, and they can't actually see the electrical system working. They only know the symptoms. For instance, if a charging system stops functioning, you can't see that electricity isn't being produced. All you know is that the battery is dead. But, if a tire goes flat, you can see the result of the problem as well as the nail that caused it!

After you've mastered the ability to properly and quickly analyze electrical problems, you'll become a valuable asset to any motorcycle or ATV service department. With a complete understanding of how the electrical systems in motorcycles and ATVs work, you should never take more than an hour or so to diagnose any electrical problem! To help you categorize electrical-system problems, we'll break down this section of your study unit into four basic areas: charging systems, ignition systems, DC circuits, and electric starter-motor troubleshooting.

Charging-system Troubleshooting

The symptoms found in a charging system that's not operating properly are simple and straightforward. The motorcycle or ATV charging system is either not charging or overcharging!

In the case of a system that's not charging, the battery will eventually go dead, and the electrical components will no longer function properly. On some older motorcycles that are used often at night and run at constant low speed with the headlight turned on, the battery may become weak and require charging. This may occur because many older motorcycles had charging systems that didn't function to their full potential until they were running at higher engine rpm. Charging systems in most of today's motorcycles and ATVs are designed to provide more-than-adequate electrical output whenever the vehicle is being operated. If a battery constantly discharges even though it's been properly maintained and the vehicle has been used frequently, check the charging system before replacing the battery with a new one. Batteries can be quite expensive!

In the case of an electrical charging system that's overcharging the battery, there will undoubtedly be a faulty component in the charging system—most likely, the voltage regulator.

Troubleshooting electrical problems isn't difficult. As a matter of fact, it's one of the cleanest jobs you'll be required to do! In most cases, the causes of the problems are as simple as a dirty or loose connection. One manufacturer has let it be known that out of every 150 charging-system components that are returned for warranty purposes, only one is actually defective! This tells us that as the technician is diagnosing the problem in the charging system, he or she is fixing the problem without even knowing it! Over 85% of all charging-system-related problems are connection-related, and not actual component problems!

Be sure you know the color codes used for wires before beginning to work on an electrical problem. Every manufacturer uses different color wires for their electrical circuitry. As you perform each step in the troubleshooting process, check to see if you've corrected the problem.

Charging Systems That Discharge or Charge Poorly

After you've verified the complaint, visually check all of the related charging-system wires and connections for damage which may result in a short-circuit (Figure 7). Check the wires between the AC generator and the regulator/rectifier, and between the regulator/rectifier and the battery.

FIGURE 7—Inspect all wiring and terminals for damage. (Copyright by American Honda Motor Co., Inc. and reprinted with permission)

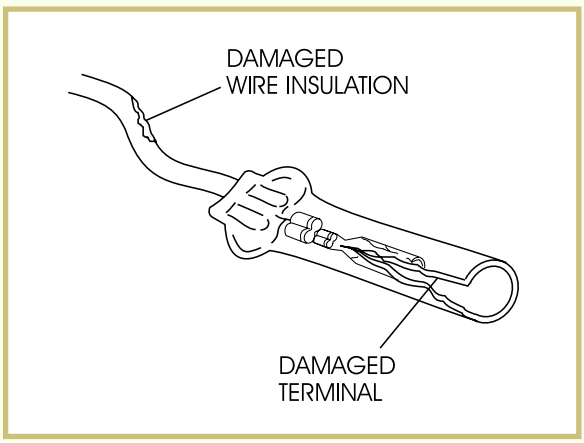

Carefully inspect the battery terminals to ensure that the electrical connections are clean and secure (Figure 8). Many charging systems use external grounding on their regulator/rectifiers. Be sure to inspect all grounds very closely. Remember that electricity must always have a completed path through ground. Also, while checking the regulator/rectifier, make sure that it's properly ventilated.

FIGURE 8—Be sure that the battery has tight and clean connections. (Copyright by American Honda Motor Co., Inc. and reprinted with permission)

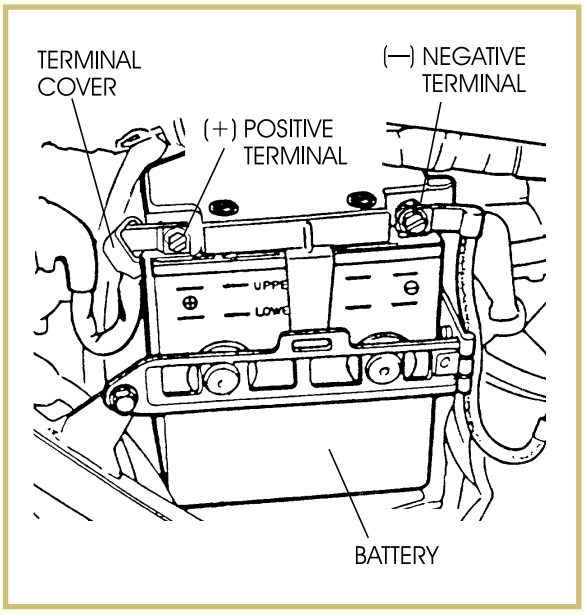

If the system is charging, but not to the specifications given by the manufacturer, the problem is most likely a loose or dirty connection. After you've visually inspected all of the wires and connectors and found no obvious problems, disconnect the charging-system-related connectors and inspect the terminals closely for corrosion or loose connections. In many cases, just disconnecting and reconnecting a connector or coupler can repair the charging-system problem if it was dirty or corroded. Clean any contaminated terminals with a high-quality contact cleaner and use dielectric grease when reconnecting the wires.

If the charging system is still not operating correctly after inspecting all connections, check the AC generator wires for continuity between terminals and between each terminal and ground. The generator specifications are contained in the appropriate service manual. If the generator has a field coil, check the continuity of the coil. Next, check the output voltage of the generator with the engine running, by attaching the leads from your multimeter to the generator. You should get a reading of approximately 12–15 Volts AC at each of the connectors in a 12-volt system.

The next item to check is the wire that's connected from the regulator/rectifier to the battery's positive terminal. Disconnect the wire from the battery and check it for continuity. When you reconnect the wire, make sure that the connection is clean and tight.

Start the engine and listen for any abnormal noises or sounds in the charging-system rotor area. If you hear anything unusual, remove the cover and inspect the rotor for damage. Sometimes a minor accident where the motorcycle was tipped over can cause rotor damage.

If the motorcycle or ATV is still not charging properly, try replacing the regulator/rectifier with a known good unit.

Charging Systems That Overcharge

The main symptoms of overcharging are usually the rapid use of battery electrolyte, which can lead to battery damage, and lights that are frequently burned out. Overcharging occurs when the voltage regulator portion of the regulator/rectifier isn't functioning properly.

If the regulator/rectifier has a wire to detect voltage from the battery, check the wire for damage and for a good connection. Also, check that the terminals of the regulator/rectifier coupler are clean.

Use the following tables to supplement the basic charging-system troubleshooting procedures we've discussed. The troubleshooting procedures in the tables can be used for any charging system.

Table 7

CHARGING-SYSTEM TROUBLESHOOTING

DISCHARGING OR WEAK CHARGING SYSTEM		
Step	**If Measurement Is Correct**	**If Measurement Is Incorrect**
1. Measure the charging voltage at the battery with the engine running at the specified rpm.	a. Check the battery for amperage loss with the key in the Off position. If excessive amperage is being drawn, locate and repair. b. Check the battery with a load tester. Replace battery if necessary.	Go to step 2.
2. Check the voltage between the battery's positive terminal and the ground side of the regulator/rectifier while the engine is running.	The problem is fixed.	a. Check for an open circuit or short in the wire harness. b. Check for poor connections. c. Go to step 3.
3. Check the stator resistance at the point where it connects to the regulator/rectifier with the coupler disconnected.	Go to step 4 (if applicable) or step 5.	a. There's a poor connection at the coupler. b. The charging coil is defective.
4. Check for field coil resistance (if applicable).	Go to step 5.	a. Check for an open circuit. b. The AC generator field coil is defective.
5. Measure the charging voltage at the battery at the specified engine rpm.	The battery is defective.	Go to step 6.
6. Replace the battery with a fully charged battery that's known to be good.	The battery is defective.	The regulator/rectifier is defective.

Table 8

CHARGING-SYSTEM TROUBLESHOOTING

OVERCHARGING CHARGING SYSTEM		
Step	**If Measurement Is Correct**	**If Measurement Is Low**
1. Check for continuity between the regulator/rectifier ground wire and chassis ground.	Go to step 2 (when applicable) or step 3.	a. Check for proper connections at the regulator/rectifier. b. Check for an open circuit in the wire harness.
2. Check for proper resistance of the field coil wire at the regulator/rectifier coupler (when applicable).	Go to step 3.	a. Check for a short circuit in the field coil. b. Check for a short in the wire harness.
3. Replace the battery with a fully charged battery that's known to be good.	The battery is defective.	Replace the regulator/rectifier.

Ignition-system Troubleshooting

No Spark

After you've determined that a motorcycle or ATV engine's ignition system isn't producing a spark, the next step in the troubleshooting procedure depends on the type of ignition system. If the ignition system uses a breaker-points assembly (Figure 9), the points and condenser are the most likely cause of the problem. To check the points, remove all necessary covers and components. Check the contacts for pitting; check for dirt or moisture between the contacts.

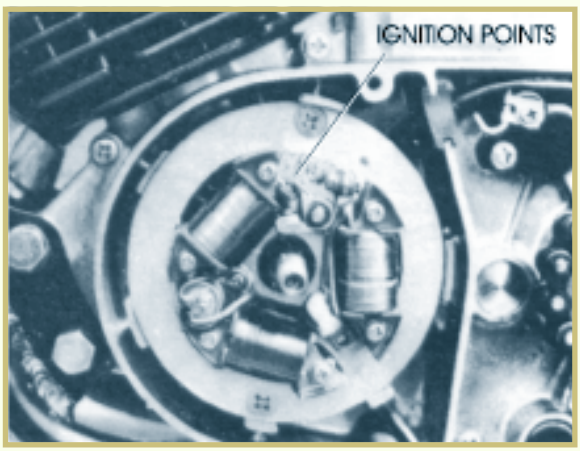

FIGURE 9—A Breaker-points Assembly

In an electronic ignition system, the problem of no spark may be caused by several different components. Fortunately, all of these components are easy to check. First, check to make sure that the engine stop-switch wire or grounding wire is properly connected and not shorted out. Then, check for proper connections at all of the ignition-related components. If these items appear to be good, check for proper resistance at the pulse generator and exciter coil (CDI ignitions). If all of these components are in proper working order, the problem is probably a failure in the ignition control module (ICM). Replace the ICM with a known good component and test the engine. If the engine operates properly, you can assume that the ICM was the problem. In a CDI system, if the engine still won't start, the flywheel key (Woodruff key) may be sheared (Figure 10) or the flywheel magnets may have lost their magnetism. Remove the flywheel to check for these conditions.

In most motorcycles and ATVs, it's very easy to remove and replace ICMs; but this component is usually quite expensive, so it's important to check all other components before replacing an ICM. Note that some manufacturers offer a testing device that's used to test the condition of ICMs. However, this piece of equipment is quite expensive, and most motorcycle shops don't have it. Remember that ICMs are very reliable, and the problem is likely to be found in another area of the ignition system.

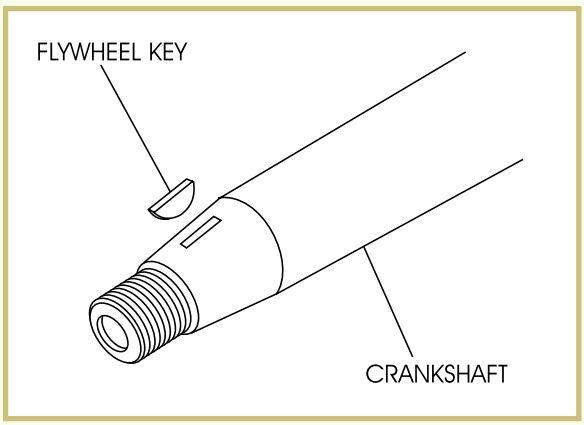

FIGURE 10—A sheared flywheel key can cause ignition failure.

In a battery-type ignition system, a weak battery can cause ignition failure. Check the battery using a voltmeter to see if the proper voltage (approximately 12V) is present. Remember that the ignition switch or safety interlock switches can also be the cause of spark failure.

Weak Spark

A weak-spark condition can be caused by many factors. In a breaker-points-and-condenser system, a weak spark is often caused by pitted or dirty points or a faulty condenser. If the point gap is too large, a weak or mistimed spark can result. A weak spark can also be caused by a defective ignition coil.

In a battery-ignition system, a weak spark may be due to low battery voltage. A low voltage won't allow the proper strength of magnetic field to be created across the coil windings. Bad battery contacts, bad ignition-switch contacts, or a faulty connection at any wire in the ignition system can also cause a weak-spark condition.

In a magneto system (including CDI systems with electronic switching components), a weak spark can be caused by weak flywheel magnets. The permanent magnets used in a flywheel rarely fail. However, these magnets can lose their magnetism over time, or as a result of an impact to the magnets. You can test the magnets by placing the blade of a large screwdriver about one inch away from the magnets. At this distance, you should feel a strong pull on the blade of the screwdriver. If the pull is weak, the flywheel should be replaced.

Although quite rare, a defective electronic-ignition module may also cause a weak spark. As we mentioned earlier, it's unlikely that the ignition module will fail; but if it does, it will likely cause a complete ignition failure.

Mistimed Spark

A mistimed ignition spark will usually be noticed as a hard-to-start or a "pinging" engine. In a breaker-points system, the point gap is critical to ignition-system timing. The point gap must be set to the manufacturer's specifications as given on the engine plate or in the service manual.

On electronic ignition systems, the position of the pulse generator and its air gap play an important part in ignition timing. Some electronic-ignition systems have slots in their pulse-generator coils that allow both up-and-down and side-to-side motion. This type of pulser coil is said to have both an air-gap adjustment and an edge-gap adjustment. In such an engine, the edge gap should be adjusted using the timing marks provided by the manufacturer.

Another possible problem with a mistimed electronic ignition is that the flywheel key has sheared. A partially sheared key will be bent, while a completely sheared key will be cut in half. A partially sheared key (Figure 11) will cause the flywheel to be out of alignment with the crankshaft, resulting in a mistimed spark. If the key is completely sheared, the engine probably won't start at all. If the key is partially sheared or completely sheared, replace it with a new key.

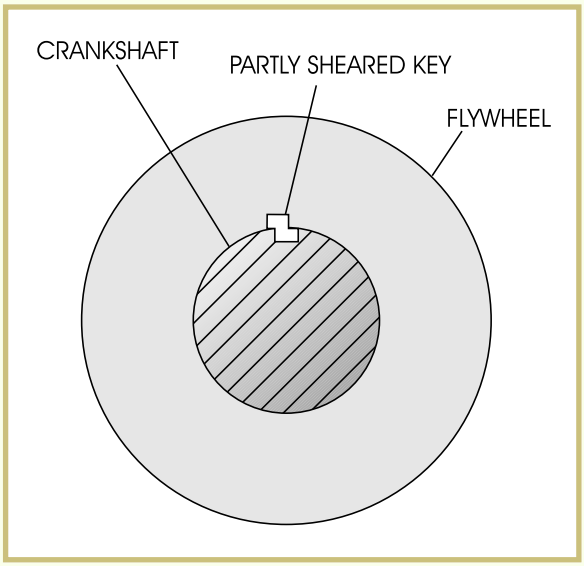

FIGURE 11—A partially sheared key will appear as if the top and bottom sections of the key are offset from each other.

As we did with the charging-system portion of our troubleshooting discussion, we'll give you two troubleshooting guideline tables—one for CDI systems and one for battery-powered electronic-ignition systems.

In a CDI system, remember that the ignition system is powered by the exciter coil. The pulse generator triggers the ignition, and the ignition is normally shut off by grounding the ignition circuit.

Table 9 CDI IGNITION TROUBLESHOOTING NO SPARK OR WEAK-SPARK CONDITION	
Step	**Action**
1. Disconnect the coupler at the CDI unit.	a. Check for a proper ground connection. b. Measure the resistance of the exciter coil. c. Measure the resistance of the pulser coil. d. Measure the resistance of the ignition-coil primary windings. Note: If any of the above have an open or short circuit, measure the resistance of the component at the coupler closest to the component.
2. Check for continuity between chassis ground and the ignition stop-switch wire at the ICM.	a. In the Run position, there should be no continuity. b. In the Off position, there should be continuity. Note: If there's continuity when the switch is in the Run position, disconnect the stop switch and check for a spark.
3. Measure the resistance of the ignition-coil secondary winding.	a. If the winding is open, remove the spark-plug cap and retest. b. If the winding is still open after the above test, replace the coil.
4. The exciter coil, pulser coil, ignition coil, and the engine-stop switches have all tested good, and all connections have been verified.	Replace the ICM.

Table 10 BATTERY-POWERED ELECTRONIC-IGNITION-SYSTEM TROUBLESHOOTING NO SPARK OR WEAK-SPARK CONDITION	
Step	**Action**
1. Disconnect the coupler at the ICM.	a. Check for a proper ground connection. b. Measure the resistance of the exciter coil. c. Measure the resistance of the ignition-coil primary windings. Note: If any of the above have an open or short circuit, measure the resistance of the component at the coupler closest to the component. d. Measure the battery voltage at the ICM with the ignition switch in the On position.
2. Measure the resistance of the ignition-coil secondary winding.	a. If open, remove the spark-plug cap and retest. b. If still open after the above test, replace the coil.
3. The battery has voltage at the ICM, the pulser coil, ignition coil, and the engine-stop switches have all tested good; and all connections have been verified.	Replace the ICM.

DC Circuit Troubleshooting

The battery in a motorcycle or ATV provides electrical energy to operate the ignition and many other electrical components. Because there are too many components to cover in this study unit, we'll focus on two components that you'll frequently encounter—lights and switches.

Light Bulbs

Burned-out light bulbs are replaced and not repaired. To check a bulb that has been removed from a circuit, you can use a battery and two wires. One wire is connected to the negative side of the battery and to the ground on the light bulb. The other wire is connected to the positive side of the battery and to the insulated side of the light bulb. If the bulb is good, it should light.

An ohmmeter can also be used to check light bulbs that have been removed from the circuit. Connecting one lead wire to the ground of the light bulb and the other to the insulated side of the bulb should cause the ohmmeter to show continuity—that is, a complete circuit.

Some light bulbs of different wattage and voltage are the same physical size, so always be sure that the replacement bulb is the same voltage and wattage as the one removed. Check the service manual if you aren't certain about what size bulb should be installed. Remember that a 12-volt system must use 12-volt bulbs and a 6-volt system must use 6-volt bulbs.

Light bulbs can become defective because of the motorcycle or ATV vibration. Vibration can cause the filament inside the light bulb to break. When this happens, the light bulb must be replaced.

Another problem that you may encounter results from a loose connection in the light bulb socket or circuit. This condition can cause the bulb to get brighter and dimmer, flicker, or not light at all. This problem is corrected by repairing or tightening the faulty connection.

Switches

Switches are designed to open and close a circuit. You can check a switch using an ohmmeter. The ohmmeter should indicate continuity when the switch is in the On position and shouldn't indicate continuity when the switch is in the Off position. If a switch is defective, it must be replaced.

Electric Starter-motor Troubleshooting

There are four main troubleshooting problems that occur with motorcycle and ATV electric starter systems:

- The starter motor turns slowly.
- The starter solenoid makes a clicking sound, but the engine doesn't turn over.
- The starter motor turns without turning over the engine.
- The starter motor doesn't turn at all.

Refer to the following table to troubleshoot these starter motor problems.

Table 11

ELECTRIC STARTER-MOTOR TROUBLESHOOTING

Symptom	Cause	Problem
Starter motor turns slowly	Low charge in the battery	a. Check for a loose battery connection. b. Check for a loose starter-motor cable. c. Check for a faulty starter motor.
Starter motor turns, but the engine doesn't turn over	Starter motor is turning backwards due to improper brush installation or improper terminal connection	a. Check for a worn starter clutch. b. Check for a worn starter pinion gear. c. Check for worn or damaged starter-motor idler or reduction gears. d. Check for a broken starter-motor chain.
Starter motor does not turn at all	Faulty fuse or safety device	a. Check all fuses. b. Check all safety devices such as transmission and side-stand lockout devices.
The starter solenoid makes a "click" sound	Faulty solenoid switch or starter motor	a. Connect the starter motor to a battery source that is known to be good. (Use large-diameter wire for this due to the heavy current flow.) b. If the starter motor turns, the solenoid switch is faulty. c. If the starter motor doesn't turn, the starter motor is defective. *(Continued)*

Table 11—Continued

ELECTRIC STARTER-MOTOR TROUBLESHOOTING

Symptom	Cause	Problem
The starter solenoid does not "click"	Faulty switch	a. Disconnect the starter solenoid switch coupler and check for continuity from the ground side of the relay to ground. b. If there's no continuity, check the following as applicable: neutral switch; clutch switch; starter switch; side-stand switch; open circuit in the wiring harness. c. If there's continuity, reconnect the solenoid switch connector and measure the voltage at the connector. d. If there's no voltage, check the following: ignition switch; break in the wire harness; loose connection at the coupler. e. If there's voltage, replace the solenoid.

Road Test 5

1. *True or False?* Blown light bulbs can be repaired.
2. What are the two main problems associated with charging systems?

   _____

3. A switch should show that it has continuity when it's in the _____ position.
4. Why is it important to thoroughly check for other failures before replacing an ICM?

   _____

5. *True or False?* It's very rare that a flaw in an ICM causes a weak spark.
6. If a charging system is overcharging, the _____ is most likely the faulty component.
7. *True or False?* The ICM is often the cause of charging system failures.
8. A(n) _____ is used to test the continuity in a switch.
9. *True or False?* Motorcycle or ATV vibration can cause premature light bulb failures.
10. The flywheel is held in place by a small piece of metal known as a(n) _____.

Check your answers with those on page 53.

TROUBLESHOOTING CHASSIS PROBLEMS

There are many different things that can go wrong with a motorcycle or ATV chassis, and determining the problem from a verbal complaint can be very difficult. This is because of the ways in which a chassis can react to different problems. An example is a steering head that shakes at certain speeds. Shake in the steering head could be caused by a problem relating to the front of the motorcycle, or it could be caused by a worn or out-of-balance rear tire! Therefore, you must be careful when attempting to solve a chassis-related problem.

Whenever you're troubleshooting a chassis problem, be sure to make only one adjustment at a time; and also, make only small adjustments each time. Chassis problems can be broken down into three categories:

- Handling problems
- Wheel and tire problems
- Brake problems

The following tables give you some of the common problems found related to motorcycle and ATV chassis systems, as well as suggestions that will most likely resolve the problem.

Table 12

HANDLING-AND-PERFORMANCE TROUBLESHOOTING

Symptom	Problem
Difficult steering	• Improper tire pressures • Worn tires • Worn or excessively tight steering-head bearings • Steering-head nut too tight • Steering stem bent
Steers off to one side or does not track straight	• Improperly adjusted fork height • Bent axle (front or rear) • Bent forks • Bent frame • Wheels improperly aligned • Swing arm bent • Worn-out wheel bearings • Worn swing arm
Machine wobbles	• Bent rim • Worn wheel bearings • Worn-out tire • Tires incorrect for application • Tire pressure incorrect

(Continued)

Table 12—Continued

HANDLING-AND-PERFORMANCE TROUBLESHOOTING

Symptom	Problem
Suspension excessively soft	• Worn or improper fork springs • Contaminated shock or fork oil • Insufficient shock or fork-oil viscosity • Fork air pressure too low (when applicable) • Fork-oil level low • Incorrect fork-spring adjustment • Tire pressure too low • Incorrect nitrogen pressure (rear gas shocks)
Suspension excessively hard	• Bent fork or shock • Fork-oil level too high • Fork-oil viscosity too high • Fork air pressure too high (when applicable) • Tire pressure too high • Incorrect shock-spring adjustment
Handlebars shake excessively	• Tire(s) worn or out of balance • Rim(s) bent • Swing arm pivot worn • Wheel bearings worn out • Handlebar clamping device loose • Steering stem loose

Table 13

WHEEL AND TIRE TROUBLESHOOTING

Symptom	Problem
Wheel turns hard	• Improperly adjusted brake • Worn wheel bearings
Difficult steering	• Improper tire pressures • Worn tires
Steers off to one side or doesn't track straight	• Bent axle (front or rear) • Wheels improperly aligned • Worn wheel bearings
Machine wobbles	• Bent rim • Worn wheel bearings • Worn-out tire • Tires incorrect for application • Tire pressure incorrect
Suspension excessively soft	• Tire pressure too low
Suspension excessively hard	• Tire pressure too high

(Continued)

Table 13

WHEEL AND TIRE TROUBLESHOOTING

Symptom	Problem
Handlebars shake excessively	• Tire(s) worn or out of balance • Rim(s) bent • Worn wheel bearings

Table 14

BRAKE TROUBLESHOOTING

HYDRAULIC BRAKES

Symptom	Problem
Brakes soft or spongy	• Air in brake line • Worn brake pads or disc • Worn or leaking master-cylinder seals • Worn or leaking caliper seals • Sliding caliper stuck (when applicable) • Low or contaminated brake fluid • Bent brake lever
Brakes hard to pull or push	• Clogged or restricted master-cylinder valve • Sticking caliper piston • Sliding caliper stuck (when applicable)
Brakes drag	• Contaminated brake pads • Wheel out of alignment • Worn brake pads • Warped brake disc • Sliding caliper stuck (when applicable)
Brakes squeak when applied	• Sticking caliper piston • Worn brake pads • Worn brake disc • Contaminated brake pads or disc

Table 15 BRAKE TROUBLESHOOTING MECHANICAL BRAKES	
Symptom	**Problem**
Poor brake performance	• Improperly adjusted brakes • Worn brake drum • Worn brake linings • Worn brake cam • Brake cable in need of lubrication • Contaminated brake linings or drum
Brake lever hard or slow to return	• Broken brake-return spring • Improperly adjusted brakes • Brake cable sticking • Improperly installed brake linings
Brakes squeak when applied	• Worn brake drum • Worn brake linings • Contaminated brake linings or drum

Road Test 6

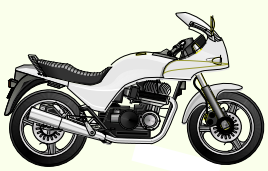

1. *True or False?* Improper tire pressures can be the cause of many different chassis-related problems.

2. A hydraulic brake system that has a soft or spongy feel probably has _____ in the brake lines.

3. *True or False?* A motorcycle steering head vibration problem will always indicate a problem in the front end of the machine.

4. What are the three major categories of chassis problems?

_____

Check your answers with those on page 54.

CONCLUSION

When you are troubleshooting a motorcycle, you should ask the following questions:

- Will the engine turn over?
- Is there compression?
- Is the air-and-fuel mixture in the proper ratio?
- Does ignition occur at the correct time?

When the answer to each of these questions is yes, the engine will run. Your job as a repair technician is to be sure the answers are all yes. You can do this using the information and procedures described in this study unit.

In addition to having the engine run, it's important that the engine run well. How well the engine runs depends on three of the previously mentioned factors (compression, air-and-fuel mixture, and ignition) being set to the proper specifications.

To conclude this study unit on motorcycle and ATV troubleshooting, we've compiled a guide that covers virtually every aspect of troubleshooting a motorcycle or ATV problem. This guide is designed for a motorcycle or ATV with an electric starting system and electronic ignition system, which are used on the majority of vehicles. Although you'll find this list to be very large, it by no means contains every possible cause for each problem listed. This guide is intended to aid you in troubleshooting problems by giving you some of the more common causes of the problems listed.

Table 16

ENGINE TROUBLESHOOTING

DOESN'T START, STARTING DIFFICULTY	
Symptom	**Problem**
Starter motor not operating	• Starter lockout or neutral-switch trouble • Starter-motor trouble • Battery voltage low • Relays not contacting or operating • Starter button not contacting • Wiring open or short • Ignition-switch trouble • Engine stop-switch trouble • Fuse blown
Starter motor operates but engine doesn't turn over	• Starter-motor clutch trouble

(Continued)

Table 16—Continued

ENGINE TROUBLESHOOTING

DOESN'T START, STARTING DIFFICULTY	
Symptom	**Problem**
Engine won't turn over	• Valve seizure • Rocker arm seizure • Cylinder, piston seizure • Crankshaft seizure • Connecting rod seizure • Transmission gear or bearing seizure • Camshaft seizure
No fuel flow	• Fuel petcock clogged • Fuel tank air vent obstructed • Fuel line clogged • Float valve clogged
Engine flooded	• Fuel level in carburetor float bowl too high • Float valve worn or stuck open • Starting technique faulty (When flooded, crank the engine with the throttle fully open to allow more air to reach the engine.)
No spark or weak spark	• Battery voltage low • Spark plug dirty, broken, or misadjusted • Spark plug cap or high-tension wiring trouble • Spark plug cap not making good contact • Spark plug incorrect • IC igniter trouble • Neutral, starter lockout, or side-stand switch trouble • Pickup coil trouble • Ignition coil trouble • Ignition or engine stop switch shorted • Wiring shorted or open • Fuse blown
Compression low	• Spark plug loose • Cylinder head not sufficiently tightened down • No valve clearance • Cylinder, piston worn • Piston ring bad (worn, weak, broken, or sticking) • Cylinder-head gasket damaged • Cylinder head warped • Valve spring broken or weak • Valve not seating properly (valve bent or worn, or carbon accumulation on the seating surface)

Table 17

ENGINE TROUBLESHOOTING

RUNS POORLY AT LOW SPEED	
Symptom	**Problem**
Spark weak	• Battery voltage low • Spark plug dirty, broken, or improperly adjusted • Spark plug cap or high-tension wiring trouble • Spark plug cap shorted or not in good contact • Spark plug incorrect • Ignition coil trouble
Air-and-fuel mixture incorrect	• Pilot screw improperly adjusted • Pilot jet or air passage clogged • Air-bleed pipe bleed holes clogged • Air cleaner clogged, poorly sealed, or missing • Choke stuck • Fuel level in carburetor float bowl too high or too low • Fuel tank air vent obstructed • Carburetor holder loose • Air-cleaner duct loose
Compression low	• Spark plug loose • Cylinder head not sufficiently tightened down • No valve clearance • Cylinder, piston worn • Piston ring bad (worn, weak, broken, or sticking) • Piston ring/land clearance excessive • Cylinder head warped • Cylinder-head gasket damaged • Valve spring broken or weak • Valve not seating properly (valve bent or worn, or carbon accumulation on the seating surface)
Other	• IC igniter trouble • Carburetors not synchronized • Carburetor vacuum piston doesn't slide smoothly • Engine oil viscosity too high • Drive train trouble • Brake dragging • Air suction valve trouble • Vacuum switch valve trouble

Table 18

ENGINE TROUBLESHOOTING

RUNS POORLY OR NO POWER AT HIGH SPEED	
Symptom	**Problem**
Firing incorrect	• Spark plug dirty, broken, or improperly adjusted • Spark plug cap shorted or not in good contact • Spark plug incorrect • IC igniter trouble • Pickup coil trouble • Ignition coil trouble
Air-and-fuel mixture incorrect	• Choke stuck • Main jet clogged or wrong-size jet needle or needle jet worn • Air jet clogged • Fuel level in carburetor float bowl too high or too low • Bleed holes of air-bleed pipe or needle jet clogged • Air cleaner clogged, poorly sealed, or missing • Air-cleaner duct poorly sealed • Water or foreign matter in fuel • Carburetor holder loose • Fuel tank air vent obstructed • Fuel petcock clogged • Fuel line clogged
Compression low	• Spark plug loose • Cylinder head not sufficiently tightened down • No valve clearance • Cylinder, piston worn • Piston ring bad (worn, weak, broken, or sticking) • Piston ring/land clearance excessive • Cylinder-head gasket damaged • Cylinder head warped • Valve spring broken or weak • Valve not seating properly (valve bent or worn, or carbon accumulation on the seating surface)
Knocking	• Carbon buildup in combustion chamber • Fuel poor quality or incorrect fuel • Spark plug incorrect • IC igniter trouble *(Continued)*

Table 18—Continued

ENGINE TROUBLESHOOTING

RUNS POORLY OR NO POWER AT HIGH SPEED	
Symptom	**Problem**
Miscellaneous	• Throttle valve won't fully open • Vacuum piston doesn't slide smoothly • Brake dragging • Clutch slipping • Overheating • Engine oil level too high • Engine oil viscosity too high • Drive train trouble • Air suction valve trouble • Vacuum switch valve trouble

Table 19

ENGINE TROUBLESHOOTING

OVERHEATING	
Symptom	**Problem**
Firing incorrect	• Spark plug dirty, broken, or improperly adjusted • Spark plug incorrect • IC igniter trouble
Air-and-fuel mixture incorrect	• Main jet clogged or wrong size • Fuel level in carburetor float bowl too low • Carburetor holder loose • Air cleaner poorly sealed or missing • Air-cleaner duct poorly sealed • Air cleaner clogged
Compression high	• Carbon buildup in combustion chamber
Engine load faulty	• Clutch slipping • Engine oil level too high • Engine oil viscosity too high • Drive train trouble • Brake dragging
Lubrication inadequate	• Engine oil level too low • Engine oil poor quality or incorrect
Gauge incorrect	• Water-temperature gauge broken • Water-temperature sensor broken
Coolant incorrect	• Coolant level too low • Coolant deteriorated

(Continued)

Table 19

ENGINE TROUBLESHOOTING

OVERHEATING	
Symptom	**Problem**
Cooling-system component incorrect	• Radiator clogged • Thermostat trouble • Radiator cap trouble • Thermostatic-fan switch trouble • Fan relay trouble • Fan motor broken • Fan blade damaged • Water pump not turning • Water pump impeller damaged

Table 20

ENGINE TROUBLESHOOTING

OVERCOOLING	
Symptom	**Problem**
Gauge incorrect	• Water-temperature gauge broken • Water-temperature sensor broken
Cooling-system component incorrect	• Thermostatic-fan switch trouble • Thermostat trouble

Table 21

DRIVE TRAIN TROUBLESHOOTING

CLUTCH PROBLEMS

Symptom	Problem
Clutch slipping	• No clutch lever play • Friction plate worn or warped • Steel plate worn or warped • Clutch spring broken or weak • Clutch cable improperly adjusted • Clutch inner cable catching • Clutch-release mechanism trouble • Clutch hub or housing unevenly worn
Clutch not disengaging properly	• Clutch lever play excessive • Clutch plate warped or too rough • Clutch spring tension uneven • Engine oil deteriorated • Engine oil viscosity too high • Engine oil level too high • Clutch driveshaft or housing frozen • Clutch-release mechanism trouble • Clutch-hub locknut too tight

Table 22

DRIVE TRAIN TROUBLESHOOTING

GEAR SHIFT PROBLEMS

Symptom	Problem
Doesn't go into gear; shift pedal doesn't return	• Clutch not disengaging • Shift fork bent or seized • Gear stuck on the shaft • Gear-positioning lever binding • Shift return spring weak or broken • Shift return-spring pin loose • Shift-mechanism arm spring broken • Shift-mechanism arm broken • Shift pawl broken

Table 22—Continued

DRIVE TRAIN TROUBLESHOOTING

GEAR SHIFT PROBLEMS	
Symptom	**Problem**
Jumps out of gear	• Shift fork worn • Gear groove worn • Gear dogs and/or dog holes worn • Shift drum groove worn • Gear positioning-lever spring weak or broken • Shift fork pin worn • Drive shaft, output shaft, and/or gear splines worn
Overshifts	• Gear positioning-lever spring weak or broken • Shift-mechanism arm spring broken

Table 23

ABNORMAL-NOISE TROUBLESHOOTING

ENGINE	
Symptom	**Problem**
Knocking	• IC igniter trouble • Carbon buildup in combustion chamber • Fuel poor quality or incorrect fuel • Spark plug incorrect • Overheating
Piston slap	• Cylinder-to-piston clearance excessive • Cylinder or piston worn • Connecting rod bent • Piston pin or piston holes worn
Valve noise	• Valve clearance incorrect • Valve spring broken or weak • Camshaft bearing worn

Table 23—Continued

ABNORMAL-NOISE TROUBLESHOOTING

ENGINE	
Symptom	**Problem**
Miscellaneous engine noise	• Connecting rod small-end clearance excessive • Connecting rod big-end clearance excessive • Piston ring worn, broken or stuck • Piston seizure, damage • Cylinder-head gasket leaking • Exhaust pipe leaking at cylinder-head connection • Crankshaft runout excessive • Engine mounts loose • Crankshaft bearing worn • Primary chain worn • Camshaft chain tensioner trouble • Camshaft chain, sprocket, guide worn • Loose alternator rotor • Air suction valve damaged • Vacuum switch valve damaged • Balancer gear worn or chipped • Balancer-shaft position improperly adjusted • Balancer bearing worn • Starter chain, sprocket, guide worn

Table 24

ABNORMAL-NOISE TROUBLESHOOTING

DRIVE TRAIN	
Symptom	**Problem**
Clutch noise	• Weak or damaged rubber damper • Clutch-housing/friction-plate clearance excessive • Clutch-housing gear worn
Transmission noise	• Bearings worn • Transmission gears worn or chipped • Metal chips jammed in gear teeth • Engine oil insufficient

(Continued)

Table 24—Continued

ABNORMAL-NOISE TROUBLESHOOTING

DRIVE TRAIN	
Symptom	**Problem**
Drive chain noise	• Drive chain adjusted improperly • Chain worn • Rear sprocket and/or engine sprocket worn • Chain lubrication insufficient • Rear wheel misaligned

Table 25

ABNORMAL-NOISE TROUBLESHOOTING

FRAME	
Symptom	**Problem**
Front fork noise	• Oil insufficient or too thin • Spring weak or broken
Rear shock absorber noise	• Shock absorber damaged
Disc-brake noise	• Pad installed incorrectly • Pad surface glazed • Disc warped • Caliper trouble
Miscellaneous frame noise	• Bracket, nut, bolt, etc., not properly mounted or tightened

Table 26

EXCESSIVE-EXHAUST-SMOKE TROUBLESHOOTING

Symptom	Problem
Blue smoke	• Piston oil ring worn • Cylinder worn • Valve oil seal damaged • Valve guide worn • Cylinder-head gasket damaged • Engine-oil level too high
Black smoke	• Air cleaner clogged • Main jet too large or fallen off • Starter plunger stuck open • Fuel level in carburetor float bowl too high

Table 27

HANDLING/STABILITY TROUBLESHOOTING

Symptom	Problem
Handlebar hard to turn	• Steering-stem locknut too tight • Bearing damaged • Steering bearing lubrication inadequate • Steering stem bent • Tire air pressure too low
Handlebar shakes or excessively vibrates	• Tire worn • Swing-arm pivot bearing worn • Rim warped or not balanced • Wheel bearing worn • Handlebar clamp loose • Steering-stem head nut loose
Handlebar pulls to one side	• Frame bent • Wheel misalignment • Swing arm bent or twisted • Steering improperly adjusted • Front fork bent • Right/left fork legs unbalanced (oil level, air pressure) *(Continued)*

Table 27—Continued

HANDLING/STABILITY TROUBLESHOOTING

Symptom	Problem
Shock absorption too hard	• Front-fork oil excessive • Front-fork oil viscosity too high • Front-fork air pressure too high • Rear shock absorber improperly adjusted • Tire air pressure too high • Front fork bent
Shock absorption too soft	• Front-fork oil insufficient and/or leaking • Front-fork oil viscosity too low • Front fork, rear shock-absorber spring weak • Rear shock-absorber oil leaking

Table 28

BRAKE TROUBLESHOOTING

Symptom	Problem
Front brake doesn't hold	• Air in brake line • Brake pad or disc worn • Brake fluid leak • Disc warped • Contaminated brake pad • Brake fluid deteriorated • Primary or secondary cup damaged • Master cylinder scratched inside
Rear brake doesn't hold	• Brake improperly adjusted • Brake lining or drum worn • Overheated • Water in brake drum • Brake cam, camshaft worn • Oil on brake linings

Table 29

BATTERY/WARNING-LIGHT INDICATION TROUBLESHOOTING

Symptom	Problem
Battery discharged	• Battery faulty (e.g., plates sulfated, shorted through sedimentation, electrolyte level too low) • Battery leads making poor contact • Excessive electrical load • Ignition switch trouble • Regulator/rectifier defective • Wiring faulty
Battery overcharged	• Regulator trouble
Oil pressure warning light goes on	• Engine-oil pump damaged • Engine-oil screen clogged • Engine-oil level too low • Engine-oil viscosity too low • Camshaft bearings worn • Crankshaft bearings worn • Oil-pressure switch damaged • Wiring damaged • Relief valve stuck open • O-ring at the oil pipe in the crankcase damaged

Road Test Answers

1

1. symptom
2. In the appropriate service manual
3. Verify the problem, isolate the problem, repair the problem, and verify the repair
4. Constant failures, intermittent failures, and failures caused by improper service
5. Lacking the self-confidence to perform the task at hand

2

1. blue
2. Piston, connecting rod, or crankshaft
3. compression
4. Ensure that all ignition switches are in the Run position.
5. False

3

1. Excessive noise or seized engine
2. Hard to shift, jumps out of gear
3. True
4. A clogged exhaust
5. Pressurize the crankcase and use soapsuds to check for leaks.

4

1. four-stroking
2. lean
3. Water
4. You should ensure that the choke is off.
5. rich
6. True
7. False
8. lean
9. rich

5

1. False
2. Overcharging, undercharging
3. On
4. ICMs are expensive to replace.
5. True
6. regulator
7. False
8. ohmmeter
9. True
10. flywheel key (Woodruff key)

6

1. True
2. air
3. False
4. Handling, brake, wheel and tire

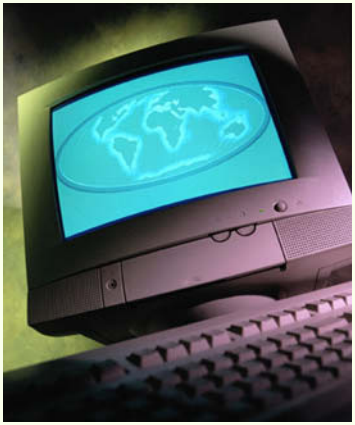

ONLINE EXAMINATION

For the online exam, you must use this

EXAMINATION NUMBER:

03301900

When you're confident that you've mastered the material in your studies, you can complete your examination online. Follow these instructions:

1. Write down the eight-digit examination number shown in the box above.
2. Click the **Back** button on your browser.
3. Click the **Take an Exam** button near the top of the screen.
4. Type in the eight-digit examination number.